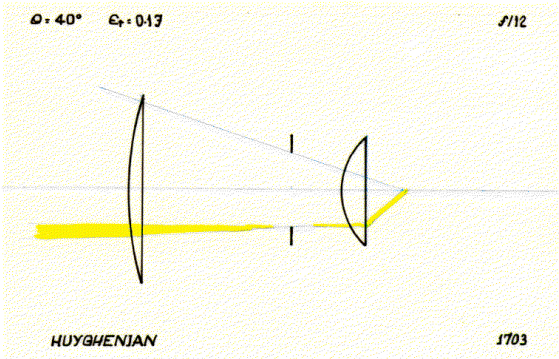


# EVOLUTION of the ASTRONOMICAL EYEPIECE

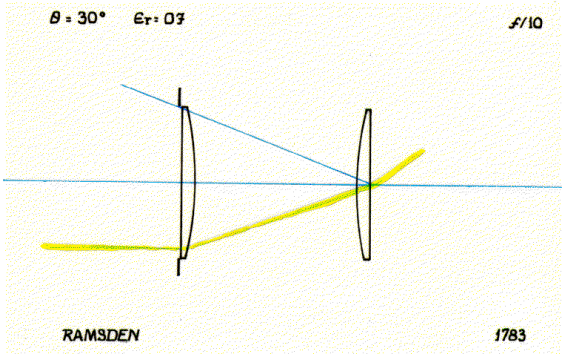


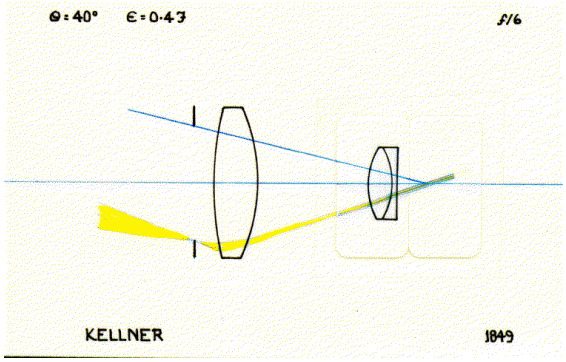


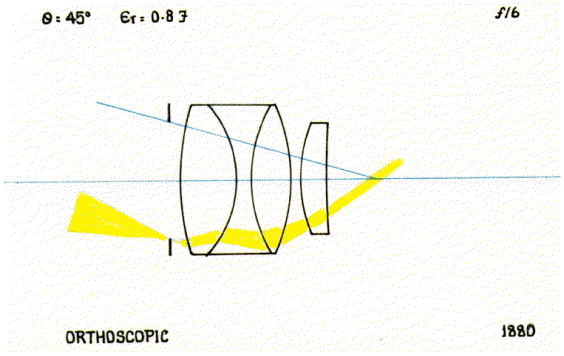


C.J.F. ICFD

## PREFACE

In writing this monograph about astronomical eyepieces Chris Lord has carried out a signal service for astronomers, be they amateur or professional.

Information on eyepieces is difficult to obtain as it is well scattered. Much that was available in the first half of this century seems to have leant heavily on the articles Optics & Telescopes in the 9th Edition of the Encyclopaedia Britannica c1892! All we seemed to read before the 1950's were descriptions of Huyghenian; Ramsden; Kellner; Orthoscopic, and, perhaps, solid eyepieces. In 1953 Horace Selby, writing in Amateur Telescope Making: Book Three brought out a paper in which he gave detailed descriptions of more than forty different eyepieces - many of which had been used during the Second World War on advanced optical equipment. This was a watershed - but it was half a century ago. Nowadays when computers are so cheap and the software so powerful it is easy to forget the skill, knowledge, and perhaps even genius of the early optical designers. Doing a single exact ray trace through an optical system may well have taken an hour whereas hundreds of rays can now be traced in a tiny fraction of a second. One can almost instantly see the effects of changing a parameter in a multi-element system. In the U.K. optical design was dominated by the methods of Prof. Conrady of Imperial College, London. In the 1930's the young Horace Dall mastered these methods - and much else besides. Soon he was designing and making high power microscope objectives that out-performed anything commercially available.

In the late 1960's, when I was Head of the Optical Department of Astronomical Equipment Ltd., I would take any available new eyepiece to Horace Dall who would dismantle it and produce a detailed optical prescription. These test reports were not published, as Selby had done - he did however write an article suitable for the non-specialist in the 1963 Yearbook of Astronomy. A slightly modified version appeared in the Journal of the British Astronomical Association, 1969. He would design and make specialist eyepieces when the need arose. His extensive notebooks are now in an archive in the Science Museum. There are rich pickings there for some future historian of science. Since Horace Dall died in 1986 development of eyepieces has gone on apace, greatly aided by the computer revolution. Maybe it will not be too long before eyepieces incorporating aspheric plastic elements are available at a reasonable cost. Certainly designs have come a great distance since the Huyghenian and Ramsden were the best available - but the perfect eyepiece is some distance away; and it will only be perfect when married to the right objective.

Chris Lord's recognition that it was the development of the camera lens and the microscope objective in the latter half of the C19th that drove forward eyepiece design, that and the new glasses from Schott, indicates what surely happened. It took a Conrady or a Dall to take time out from designing photographic lenses and microscope objectives to improve eyepieces. Let us hope that this monograph may inspire others to turn their hand to improving eyepiece design.

E.J. HYSOM F.R.A.S., February 1997

## FOREWARD

Since its invention in the early C17th the astronomical telescope has undergone many fundamental design changes, modifications and on occaisions a complete rethink. However it is not only the telescope's objective that has been improved. In the quest to obtain the very best from the objective, the eyepiece has also evolved to a degree of complexity that rivals many camera lenses.

And it is not only newcomers to astronomy who find the plethora of currently available eyepiece types somewhat bewildering. Eyepiece design has developed apace during the past quarter of a century, and many seasoned observers possess but the sketchiest understanding of recent designs and how their performance compares to the older and more familiar types with which they grew up. There are also a good many commonly held misconceptions concerning familiar eyepiece designs, and erroneous assumptions about their modern counterparts. Many of these misconceptions are repeated across several generations of astronomical texts.

In describing the vast majority of the eyepiece types one is likely to come across and their properties, I have endeavoured to fill a void in the literature upon telescope usage. Much of this information is hidden away in obscure non-astronomical publications, even more scattered across long out-of-print reference books.

I have intentionally omitted coverage of erecting, variable power or zoom eyepieces, more common in binoculars and terrestrial spotting telescopes. This is not to say these supplementary accessories do not have a useful role in observation; however one has to draw the line somewhere and in describing most fixed focus inverting eyepieces, telescope users will find this a useful guide.

Where circumstances warrant I have expressed my own personal opinions about some designs, particularly those advertised in American magazines. I make no apology for this. They are my own views based upon my experience in using most of the eyepiece types I describe, but they are not universally held, and I leave it to the reader to make up his or her own mind based on all the available evidence. This is preferable to blindly following advertising "hype". One will learn a very biased little from the blandishments of salesmen, and the amateur whose knowledge of the topic is based mainly on dealer catalogues in fact knows less than little. Nor are the so called "review" articles in American magazines as wholly objective as they would like to imply, such is the power of the advertiser upon whose revenue and good will the publisher is almost entirely dependent.

One of the most significant points one can make regarding objective-eyepiece combinations is that just because a particular eyepiece works well with one telescope does not mean it will necessarily work equally well with another. That is why some observers, the author included, continue to acquire different eyepieces as and when the opportunity arises. It is a fascinating Cinderella subject, neglected by practically every observing and telescope handbook.

Read, learn and enjoy.

C.J.R. LORD B.Ed.,F.R.A.S.
BRAYEBROOK OBSERVATORY
MARCH 1996

**CONTENTS** **PAGES**


| | | |
|---|---|---|
| **Eyepiece types in order of origin** | | i - iv |
| Preface | | 3 |
| Foreward | | 4 |
| Introduction | | 9 |
| Properties of an astronomical eyepiece | | 9 - 13 |
| Properties when used with a telescope objective | | 15 - 17 |
| **EYEPIECE DESIGNS:** | | |
| **Single Lens Eyepieces** | -the Keplerian | 18 |
| | -the Herschelian | 18 |
| | -the Wollaston | 18 |
| | -the Coddington | 18 |
| | -the Tolles | 19 |
| **Variants of Solid Eyepieces** | -the achromatic doublet | 20 |
| **Two Lens Eyepieces** | -the Huyghenian | 21 |
| | -the Ramsden | 22 |
| **Variants of the Huyghenian** | -the Mittenzuuey | 22 |
| | -the Airy | 22 |
| **Further Variants of Solid Eyepieces** | -Steinheil doublet | 23 |
| | -Steinheil Monocentric | 24 |
| | -Zeiss Monocentric | 24 |
| | -Schröder's triplet | 25 |
| | -Hastings Loupe | 25 |
| **Orthoscopic Eyepieces** | -Abbé Orthoscopic | 26 |
| | -Zeiss Orthoscopic | 26 |
| | -Barr & Stroud Aspheric | 26 |
| | -Zeiss Aspheric | 26 |
| | -Kalliscopic Orthoskop | 27 |
| | -Goerz Orthoscopic | 27 - 28 |
| | -the Galoc | 28 |
| **Achromatic & Wide-Field Eyepieces** | -the Kellner | 29 |
| | -the Plössl | 30 |
| | -the Symmetrical | 30 |
| | -the Dial Sight | 30 |
| **Achromatic Wide-Field Derivatives** | -Cooke 3 lens | 31 |
| | -Cooke 5 lens | 32 |
| | -Kellner III | 32 |
| | -Zeiss Wide-Angle | 33 |
| | -Straubel | 33 |
| | -König Widefeld | 33 |
| | -Zeiss? Wide-Angle | 34 |
| | -Euryscopic III | 34 |
| | -Bertele | 34 |
| | -König | 35 |
| | -König II | 35 |
| | -Schulz | 35 |
| | -Triplane | 35 |
| | -RKE | 35 |
| | -Wide Orthoscopic | 35 |

**CONTENTS** **PAGES**


| | | |
|---|---|---|
| **Derivatives of the Plössl and Symmetrical** | | |
| | -Schröder's Aplanatic | 36 |
| | -Erflè I | 36 |
| | -Erflè II | 36 |
| | -Erflè III | 36 |
| | -Kapella | 36 |
| | -Kaspereit | 36 |
| | -Zeiss Astroplanokular | 37 |
| | -Brandon Orthoscopic | 37 |
| | -Kalliplan | 38 |
| | -Panscopic | 38 |
| | -Platyscopic | 38 |
| | -Panoptic | 38 |
| | -Wide Field | 38 |
| | -Super Wide Aspheric | 38 |
| | -Leitz Widefeld Aspheric | 38 |
| | -LE | 38 |
| | -LV | 38 |
| **Compensating Eyepieces** | -Shoemaker | 39 |
| | -Tuscon Aspheric | 39 |
| | -Clarke | 39 |
| | -Klee Pretoria | 39 |
| **Negative-Positive Eyepieces** | -Fleischman | 39 |
| | -Nagler I | 40 |
| | -Nagler II | 40 |
| | -Meade UWA | 40 |
| **What are the best designs?** | | 41 |
| **The evolution of eyepiece design** | | 42 - 43 |
| **Selecting eyepieces** | | 44 |
| **Testing eyepieces** | | 45 - 47 |
| **Care and maintenance of eyepieces** | | 47 - 48 |
| **The eyepiece and the eye** | | 48 - 49 |

**CONTENTS** **PAGES**

**APPENDIX**
**Apparent luminance of telescopic image** 50 - 53

**Surface quality of optical elements** 54

**ILLUSTRATIONS**
-Eyepieces 1610 to 1990+ 8
-Properties of an Astronomical Eyepiece 9
-The Barlow Lens 15
-Eyepiece Apparent Field of View 17
-Physical Characteristics of Ideal Eyepiece 47
-The Eyepiece & the Eye 49
-Apparent Luminosity of Telescopic Image 51 - 52
-Eyepiece Evolution 1610 to 1990+

**Eyepiece Diagrams**
-Tolles 19
-Huyghenian 21
-Ramsden 22
-Steinheil Monocentric 24
-Hastings Loupe 25
-Orthoscopic 26
-Orthoskop - König 27
-Goerz 27 - 28
-Modified Galoc 28
-Kellner 29
-Plössl 30
-Cooke (3 lens) 31
-Kellner II 32
-König Wide Field 33
-Bertele 34
-König II 35
-Kaspereit Modified Erflè 36
-Zeiss Astroplanar 37
-Brandon (PC Ray Trace by R.A. Buchroeder) 37
-Fleischman 39
-Nagler I 40

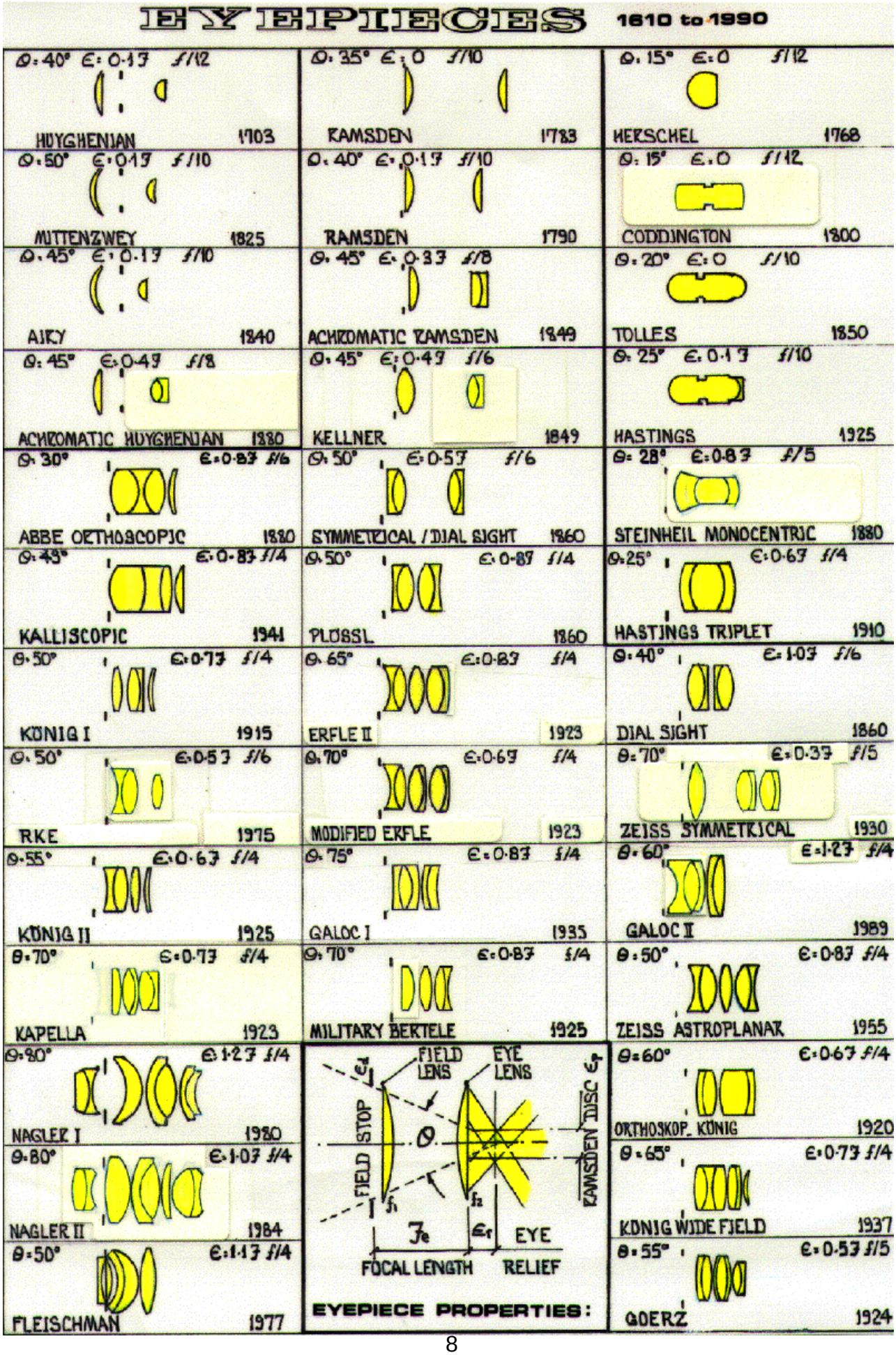
EYEPIECES 1610 to 1990
θ: 40° ε: 0.17 f/12
HUYGHENIAN 1703
θ: 35° ε: 0 f/10
RAMSDEN 1783
θ: 15° ε: 0 f/12
HERSCHEL 1768
θ: 50° ε: 0.17 f/10
MITTENZWEY 1825
θ: 40° ε: 0.17 f/10
RAMSDEN 1790
θ: 15° ε: 0 f/12
CODDINGTON 1800
θ: 45° ε: 0.17 f/10
AIRY 1840
θ: 45° ε: 0.33 f/8
ACHROMATIC RAMSDEN 1849
θ: 20° ε: 0 f/10
TOLLES 1850
θ: 45° ε: 0.43 f/8
ACHROMATIC HUYGHENIAN 1880
θ: 45° ε: 0.43 f/6
KELLNER 1849
θ: 25° ε: 0.17 f/10
HASTINGS 1925
θ: 30° ε: 0.83 f/6
ABBE ORTHOSCOPIC 1880
θ: 50° ε: 0.53 f/6
SYMMETRICAL / DIAL SIGHT 1860
θ: 28° ε: 0.83 f/5
STEINHEIL MONOCENTRIC 1880
θ: 45° ε: 0.83 f/4
KALLISCOPIC 1941
θ: 50° ε: 0.87 f/4
PLÖSSL 1860
θ: 25° ε: 0.67 f/4
HASTINGS TRIPLET 1910
θ: 50° ε: 0.73 f/4
KÖNIG I 1915
θ: 65° ε: 0.83 f/4
ERFLE II 1923
θ: 40° ε: 1.03 f/6
DIAL SIGHT 1860
θ: 50° ε: 0.53 f/6
RKE 1975
θ: 70° ε: 0.63 f/4
MODIFIED ERFLE 1923
θ: 70° ε: 0.37 f/5
ZEISS SYMMETRICAL 1930
θ: 55° ε: 0.67 f/4
KÖNIG II 1925
θ: 75° ε: 0.83 f/4
GALOC I 1935
θ: 60° ε: 1.27 f/4
GALOC II 1989
θ: 70° ε: 0.73 f/4
KAPELLA 1923
θ: 70° ε: 0.83 f/4
MILITARY BERTELE 1925
θ: 50° ε: 0.83 f/4
ZEISS ASTROPLANAR 1955
θ: 80° ε: 1.27 f/4
NAGLER I 1980
θ: 80° ε: 1.03 f/4
NAGLER II 1984
θ: 50° ε: 1.13 f/4
FLEISCHMAN 1977
FIELD LENS
EYE LENS
FIELD STOP
RAMSDEN DISC
FOCAL LENGTH
EYE RELIEF
EYEPIECE PROPERTIES:
θ: 60° ε: 0.67 f/4
ORTHOSKOP. KÖNIG 1920
θ: 65° ε: 0.73 f/4
KÖNIG WIDE FIELD 1937
θ: 55° ε: 0.53 f/5
GOERZ 1924

## INTRODUCTION

Of equal importance in the astronomical telescope to the objective, is the eyepiece, and yet despite a wealth of technical information written about the former, little has been written about eyepieces per sé. The aberrations of the objective are rarely viewed in isolation, and it is not generally appreciated that in most circumstances it is the aberrations of the eyepiece which predominate.

In this monograph it is my intention to rectify this omission and acquaint readers with the specific properties of many different inverting eyepiece types that have been designed over the past three centuries.

The evolution of the inverting eyepiece has been one of increasing field of view and eye relief whilst simultaneously striving to reduce aberrations that restrict that field of view. As well as providing ray path schematics of the most well known types to accompany their descriptions, the author has also drawn a family tree showing the development of all the different types in broad terms, and how they relate to each other. Readers will find it helpful to refer to this diagram when consulting the individual eyepiece descriptions.

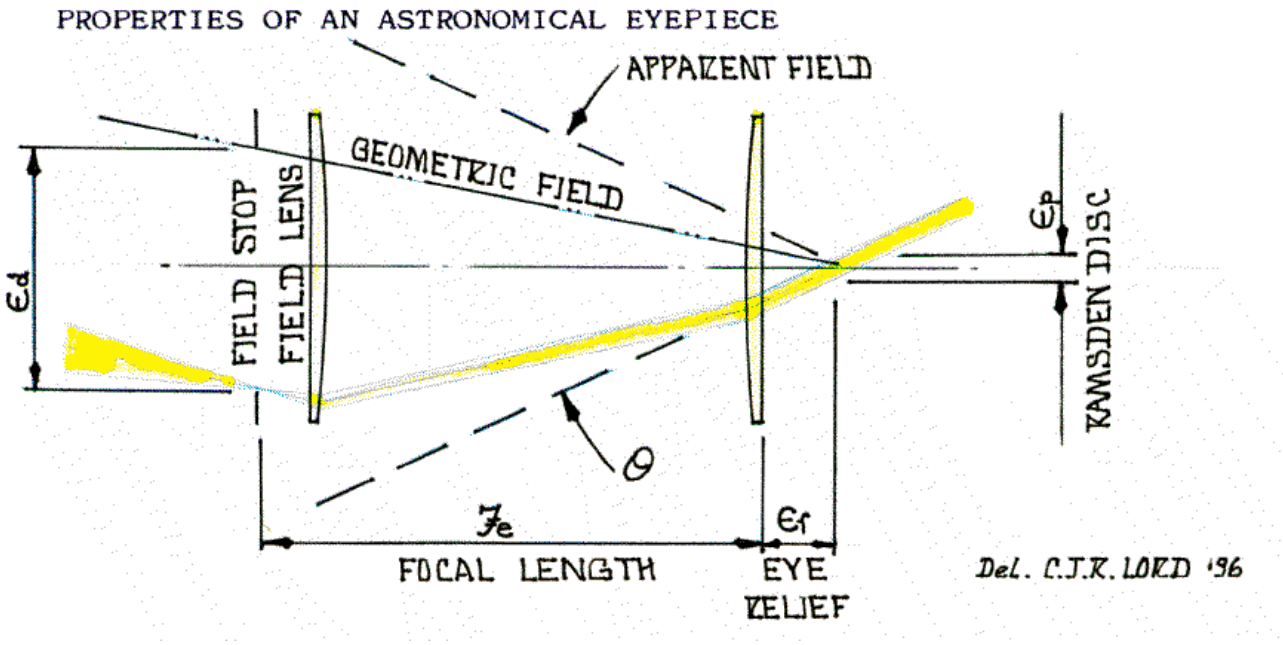

# EVOLUTION of the ASTRONOMICAL EYEPIECE

The important basic optical properties of an astronomical eyepiece are its focal length, apparent field of view and eye relief. When fitted to a particular telescope it will be afflicted by various aberrations and exhibit the following characteristics to some extent or another:

a) longitudinal chromatic aberration
b) chromatic inequality of magnification (lateral colour)
c) spherical aberration
d) coma
e) astigmatism
f) field curvature
g) distortion
h) spherical aberration of the exit pupil
i) internal reflections (ghost images)

Because optical aberrations 'a' thru' 'e' are proportional to the diameter of the exit pupil, the longer the focal length the more pronounced they become.
Eye relief is given by:

$$Er = bfl + \frac{Fe^2}{F}$$

where bfl is the eyepiece back focal length. It increases with the focal ratio of the objective, i.e. as the focal ratio becomes faster.

a) Longitudinal chromatic aberration is a first order aberration in which the final image does not lie in a single plane. An undercorrected eyepiece will have a longer effective focal length in red light, an overcorrected eyepiece a longer effective focal length in blue light.

b) Chromatic inequality of magnification is a consequence of 'a', where the image is magnified by slightly different amounts at different wavelengths. When the image is displaced towards the field stop, lateral colour manifests itself, red inwards in undercorrected types and blue inwards in overcorrected types. It is therefore possible to detect the colour correction of an eyepiece by examining the colour fringing around the field stop when it is held up to a white light source and placing the eye at the eye point. If the field stop is fringed with red light the eyepiece is undercorrected, and if fringed with blue light, overcorrected.

c) Spherical aberration is suppressed in multi-element designs, but it is present in single or two element designs to some extent or another. The faster the focal ratio of the objective the more objectionable spherical aberration, if present, becomes, increasing as the square of the f/no.

d & e) Coma and astigmatism are off axis aberrations. In aplanatic (ref.p23) eyepiece designs coma is well suppressed, and in orthoscopic designs both coma and astigmatism. However in wide angle designs it is not possible to correct both distortion and astigmatism in the outfield. Because, in astronomical applications, distortion is judged to be less objectionable, astigmatism is suppressed at its expense. Both astigmatism and coma occur in combination and manifest themselves by an assymetric appearance of the Airy disc.

f) Curvature of the focal surface in the absence of astig,matism is called the Petzval surface. Most telescope objectives and positive eyepieces have positive Petzval field curvature. In the absence of astigmatism the image of a point source is formed on a curved surface. If astigmatism is introduced the focal surface moves away from the Petzval surface towards the Guassian image plane (perpendicular to the optical axis). As it does so however the best focus deteriorates since its quality depends on the magnitude of the astigmatism alone. Thus, whilst the out-of-focus associated with Petzval field curvature is reduced, the astigmatism is increased.

g) Distortion is analogous to inequality of magnification with field radius. Positive distortion is referred to as pincushion and negative distortion is referred to as barrel distortion. Distortion is well suppressed in orthoscopic designs. It is not possible to simultaneously correct coma and distortion at the same field radius.

h) Not strictly an optical aberration, spherical aberration of the exit pupil manifests itself by all light pencils not crossing the optical axis at the same distance behind the field stop. The wider the exit pupil the more of a nuisance this residual property of many ultra-wide angle designs becomes. Sometimes it is referred to as the kidney-bean effect because it causes zones of the field of view shaped thus to darken.

i) Internal reflections occur at all surfaces where there is an abrupt change in refractive index (typically more than 0.25). Single internal reflections cause light to be scattered across the field, only double reflections can lead to ghost images. Not all ghost images come to a focus. Those that do not only cause light scatter across the field and a reduction in image contrast. Not all coatings can eliminate ghosts. The number of potential ghosts is given by:

$$\frac{1}{2}N\left(N-1\right)$$

where N is the number of air-glass surfaces and cemented surfaces with an index gradient more than $^1/_4$. The potential problems of ghosting increase rapidly with the number of lens groups.

| Number of reflecting surfaces | Potential Ghosts | Eyepiece Types |
|---|---|---|
| 2 | 1 | Tolles |
| 3 | 3 | Steinheil Loupe |
| 4 | 6 | Orthoscopic; Plössl; Galoc |
| 6 | 15 | Bertele; König |
| 8 | 28 | Panoptic; Nagler I; Leitz Widefeld |
| 10 | 45 | Nagler II; Meade UWA |

It must be emphasised that

$$\frac{1}{2}N\left(N-1\right)$$

indicates the number of 'potential' ghosts, not the actual number. The task of the designer is to ensure that internal reflections do not focus in or near the image plane and form ghost images. But, the increase in transmission losses due to internal reflections, even if the designer can cleverly avoid the formation of ghost images becomes a big problem in complex multi-element designs.

Reflection losses may be quantified in terms of the refractive index gradient at the media boundary, hence:

$$k = \left\{1-\left(\frac{\mu_1-\mu_2}{\mu_1+\mu_2}\right)^2\right\}\left\{1-\left(\frac{\mu_2-\mu_3}{\mu_2+\mu_3}\right)^2\right\}\ldots\ldots\ldots\ldots\left\{1-\left(\frac{\mu_{n-1}-\mu_n}{\mu_{n-1}+\mu_n}\right)^2\right\}$$

for a cemented surface where:

$\mu_1 = \mu_2 = 1.5$ (Canada balsam or Xylol)

and where:

$\mu_3 = 1.7 \quad k = 0.39\%$

$\mu_3 = 1.8 \quad k = 0.83\%$

$\mu_3 = 1.9 \quad k = 1.38\%$

$\mu_3 = 2.0 \quad k = 2.04\%$

and at an air-glass surface where:

$\mu_2 = 1.0$

$\mu_1 = 1.5 \quad k = 4.0\%$

$\mu_1 = 1.6 \quad k = 5.33\%$

$\mu = 1.7 \quad k = 6.72\%$

$\mu_1 = 1.8 \quad k = 8.16\%$

$\mu_1 = 1.9 \quad k = 9.63\%$

$\mu_1 = 2.0 \quad k = 11.11\%$

It is therefore evident that reflection losses from an air-glass surface are greater than from a cemented surface, but they also increase with the index gradient. Because the refractive index of glass changes with wavelength (dispersion), reflection losses vary across the spectrum, which is why ghosts often assume a specific hue.

Anti-reflection coatings, developed in the late 1930's can virtually eliminate reflection at air-glass surfaces. The principle involved is the suppression of the reflected incident ray by destructive interference, balanced by constructive interference in the transmitted pencil arising from reflection within the film.

This can occur when the square of the coating index equals the glass index, the optical thickness of the film being a quarter wave. Herein though lies the first difficulty, for:

$\sqrt{\mu}$ for crown and flint glass are respectively 1.231 & 1.271, and no solids have refractive indices as low as this. Among the nearest are lithium fluoride ($\mu$=1.39, reducing the loss from between 4% - 5%, to a theoretical 0.1%,- nearer 1.5% in practice - over the visual spectrum); calcium fluoride ($\mu$=1.34); sodium and magnesium fluorides; magnesium chloride; silicon dioxide ($\mu$=1.46); cryolite and certain fatty acids.

None of these are perfect: lithium fluoride is fragile and soluble in water, hence useless for outer surfaces;

magnesium salts, although more durable, are less efficient; the fatty acids are also only suitable for internal air-glass surfaces; cryolite is resistant to most corrosive agents, but not to water; silicon dioxide, more stable than cryolite to water, is less resistant to abrasion, but of all the materials available, it is the most satisfactory protective coating.

In order to get round the difficulties in suppressing reflections off air-glass surfaces, caused by the limitations of these individual materials, lens manufacturers resorted to multiple layer films. By arranging the coatings such that the square of the outer coating index equals the adjacent coating index, and so on through to the glass index, and ensuring the external coating is durable (e.g. silicon dioxide), then reflection losses off air-glass surfaces may be reduced to almost zero across the entire spectrum. This technique is termed 'multi-coating'.

It is however impossible to reduce reflection losses at a cemented surface where there is an index gradient because the balsam cannot have precisely the same index as the different glasses either side of it! So, as long as there is an index gradient, inevitably there is a reflection loss.

As an illustration of the seriousness of this problem, consider three different eyepieces: a single element crown lens with only two air-glass surfaces; an orthoscopic with four air-glass surfaces and two cemented surfaces where the index gradient is 0.2; a multi-element ultra-wide angle eyepiece with ten air-glass surfaces and three cemented surfaces where the index gradient is only 0.1.

Without multi-coatings on all air-glass surfaces the ultra-wide angle design would not be practicable. The table also illustrates the significance of anti-reflection coatings in maximising transmission and image contrast.

| EYEPIECE TYPE | REFLECTION LOSSES | | |
|---|---|---|---|
| | Uncoated | Magnesium Fluoride | Multi-coating |
| SINGLE LENS | 8% | 2% | 0.2% |
| ORTHOSCOPIC | 16.8% | 4.8% | 0.8% |
| ULTRA-WIDE ANGLE | 41.44% | 11.4% | 2.4% |

## PROPERTIES OF AN ASTRONOMICAL EYEPIECE WHEN USED IN COMBINATION WITH A TELESCOPE OBJECTIVE

The magnification is given by:

$$M = \frac{F}{Fe} = \frac{D}{Ep}$$

where F is the objective effective focal length
D is the objective aperture
Fe is the eyepiece effective focal length
Ep is the exit pupil diameter

This can be increased by employing a Barlow lens, where amplification:

$$A = \frac{S}{d}$$

&

$$S = B(A - 1)$$

where B is the Barlow focal length

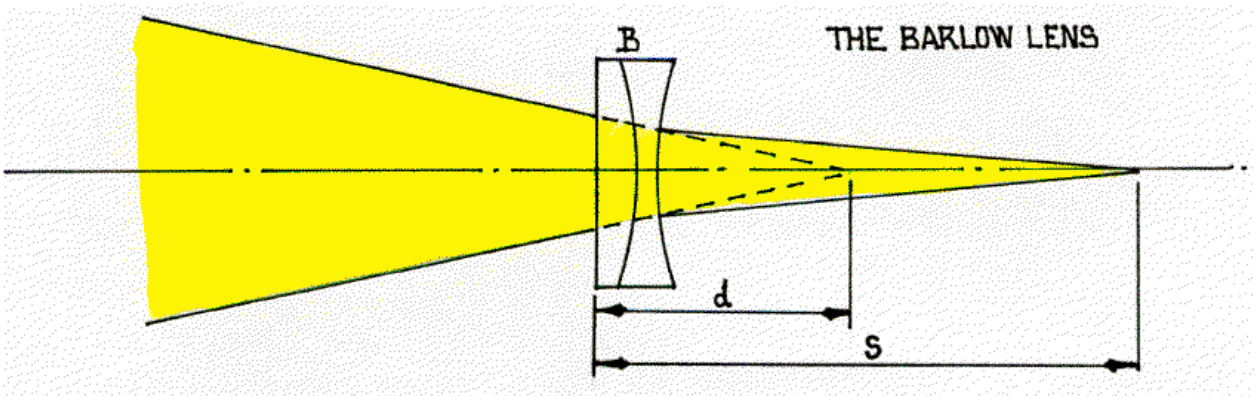


By increasing the effective focal length of the objective in this way, the focal ratio is reduced, which improves off axis performance and reduces residual chromatic and spherical aberrations owing to the smaller exit pupil.

The useful range of exit pupil diameters lies between 8mm and 0.5mm. An exit pupil much wider than 8mm, the widest pupilliary opening, effectively stops down the objective; exit pupils smaller than 0.5mm are accompanied by unwanted diffraction effects that significantly reduce contrast.

In terms of objective aperture, the useful magnification range is:

$$2D_{(mm)} \geq M \geq 0.125D_{(mm)}$$

The exit pupil is related to the objective focal ratio by:

$$Ep = \frac{Fe}{f/no.}$$

and hence the upper and lower limits of the eyepiece focal length are dependent purely on the objective focal ratio:

$$at \quad M_{\min} \quad Fe_{\max} = 8.f/no.$$
$$at \quad M_{\max} \quad Fe_{\min} = 0.5.f/no.$$

The apparent field of view is governed by the eyepiece design, and is given by:

$$\theta = \frac{6}{\pi}\sin^{-1}\frac{e}{2}$$

where:

$$e = \frac{Ed}{Fe}$$

where Ed is the field stop diameter, provided angular magnification distortion and rectilinear distortion are fully corrected. In the presence of either, i.e. where the condition of orthoscopy is not met, then e is modified by:

$$e = \frac{Ed}{Fe}\left(1 + E.\tan^3\theta\right)$$

where E is the coefficient of distortion and ϑ the apparent field. In some wide angle designs, such as the Erfle and the Nagler, rectilinear distortion exceeds 25% (E=0.25+), although angular magnification distortion is suppressed (E=0.05-). It is not possible to suppress both angular magnification distortion and rectilinear distortion simultaneously at the same field radius because the former is proportional to the tangent of the angular field radius, and the latter the field radius in radians. In military eyepieces, and binocular eyepieces, where terrestrial objects are viewed, rectilinear distortion is undesirable, and it is suppressed at the expense of astigmatism. The real field is given by:

$$\theta' = 2\tan^{-1}.\frac{Fe}{F}.\tan\frac{\theta}{2}$$

and is limited by the diameter of the drawtube, hence:

$$\theta' = 2\tan^{-1}.\frac{Ed}{2F}$$

and

$$\theta'_{\max} = \frac{48}{\pi.D_{(mm)}}.\sin^{-1}\frac{Ed}{16.f/no.}$$

hence for a given aperture, the widest real field increases with the focal ratio.

The eye relief or eye clearance is also governed by the design, and can very from zero to over 1.0Fe. Having too great an eye clearance can prove as bothersome as having none at all. Values between 0.6Fe to 0.9Fe are to be desired in medium focal lengths (10mm to 25mm), the latter enabling spectacle wearers to observe without having to remove them.

**The apparent field widens as the field stop is enlarged for a given eyepiece focal length. Seven separate curves represent apparent fields for different positive coefficients of distortion. For example, when the diameter of the field stop equals the focal length, in the absence of distortion the field is 57°.3. When E=0.1 the field enlarges to 66°. The zero distortion field is referred to as the geometric field. Distortion increases from zero on axis to the coefficient value at the field limit, and varies with the cube of the field radius.**

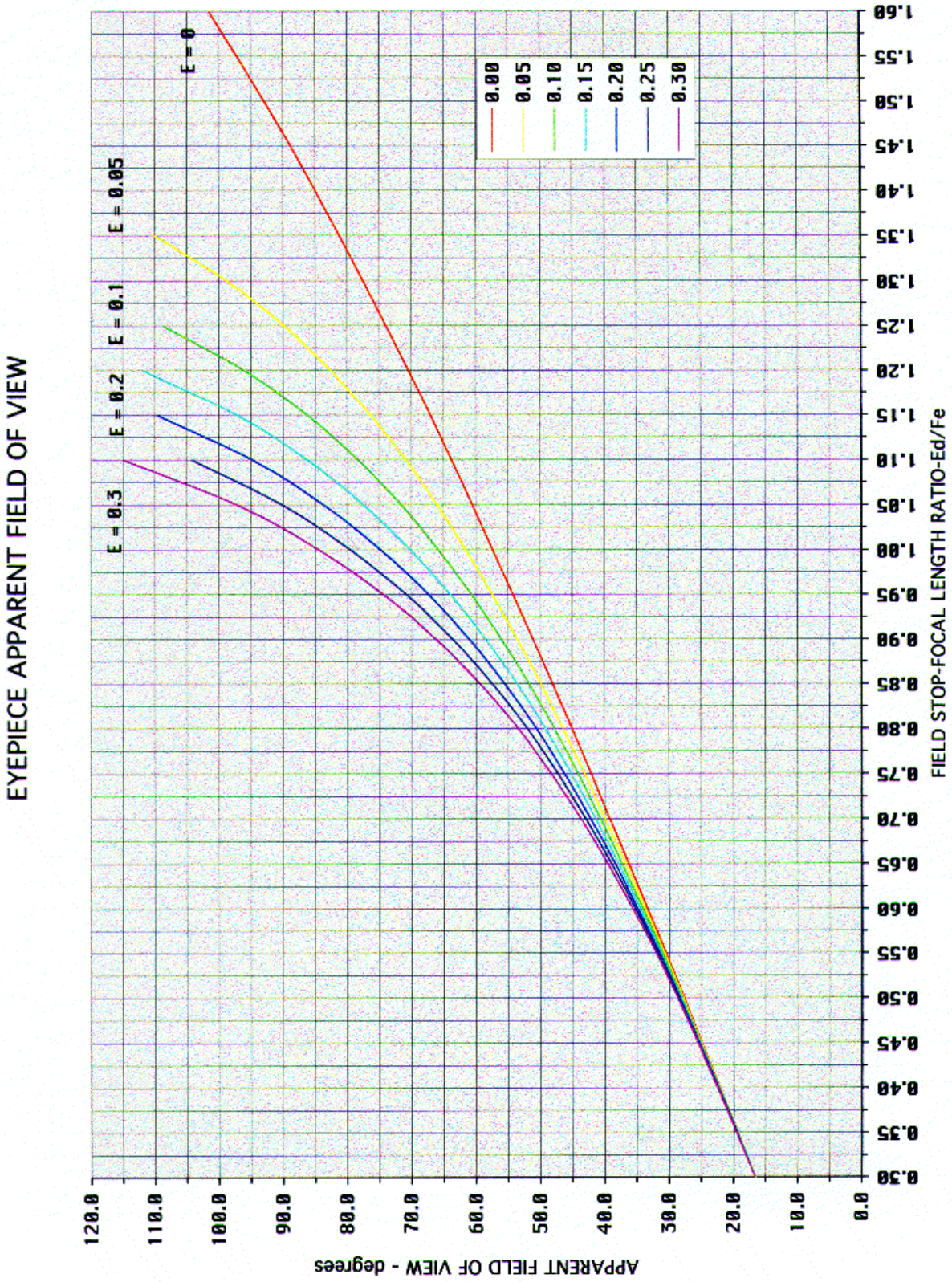

**EYEPIECE DESIGNS**

Eyepiece designs fall into six basic categories: solid; negative; orthoscopic; achromatic/wide-field; negative-positive; compensating.

A solid eyepiece is any which has only two air-glass surfaces, regardless of the number of elements. The negative, negative-positive and compensating types possess an internal field stop. All other types have an external field stop. Orthoscopic eyepieces are, in principle, those corrected for both coma and distortion. They are also corrected for longitudinal spherical and chromatic aberrations and lateral colour, usually over a field not wider than a radian (57°). Achromatic/Wide-field types extend the fields and aberration correction of simpler types, and encompass the majority of eyepieces developed over the past 150 years.

**SINGLE LENS EYEPIECES:**

The most primitive inverting eyepiece was recommended by Johannes Kepler in 1610 and bears his name. Originally it was an equi-convex lens, but it was realised that if the lens was altered such that the first surface became shallower, or even plane, aberrations would be reduced slightly. Bearing in mind the very long focal lengths of the single element refracting objectives used in astronomical telescopes throughout the C17th. Kepler's eyepiece was all that was needed. The field of full illumination is given by:

$$\tan\frac{\theta}{2} = (\mu - 1) - \frac{1}{2.f/no.}$$

where m is the glass refractive index. Off axis aberrations become intolerable though when $\Theta > 15°$, but since the focal ratio of single element objective refractors was typically f/100, and the biggest eyepiece lenses were no wider than 100mm, this limitation is somewhat academic.

The exit pupil lies at: $Fe\left(1+\frac{1}{M}\right)$

hence: $Er \approx Fe$

**THE SPHERICAL LENS EYEPIECE:**

An extreme form of equi-convex, first employed by the microscopist Leeuwenhoek, is the spherical lens. Eyepieces of this form were made by William Herschel from 1768 onwards. The glass spheres were made by dropping beads of molten glass into water, and selecting and mounting them in turned holders of lignum vitae. The focal length is given by:

$$Fe = \frac{\mu.r}{2(\mu - 1)}$$

and because, for ordinary window crown, m=1.5; Fe = 1.5r and Er = 0.5Fe. To increase Er marginally, a flat was polished on the side facing the eye.

Whilst secretary of the Royal Society, William Hyde Wollaston (1766-1828) devised a modified form of spherical magnifier, having a pair of plano-convex hemispherical lenses cemented back to back with a central field stop. David Brewster subsequently devised a larger version, with the edge hollow ground giving the finished lens the appearance of a diablo. There followed other variants of the spherical lens magnifier. The Coddington, in which the first and second surface had the same radius struck from a common centre; the field being defined by a central groove ground into the edge. About the same period (early C19th.) Charles Stanhope, the botanist, devised another solid form, in which the field surface was made much shallower.

None of these spherical or quasi-spherical forms possessed good edge definition. Spherical and chromatic aberrations were so heavily undercorrected that the central definition fell off markedly.

The first effective solution to this problem appeared in the United States of America in the middle of the last century when Robert B. Tolles developed a microscope objective in the form of a solid Huyghenian (to be described later). Tolles realised that chromatic inequality of magnification could be suppressed simultaneously with longitudinal spherical aberration when the overall length of the lens is related to the refractive index and surface radii. Hence for chromatic correction, the separation of $r_1$ & $r_2$ becomes:

$$d = \frac{r_1 - r_2}{1 - \frac{1}{\mu^2}}$$

The design was later manufactured and sold as an inverting eyepiece. In its common form $2r_1 = 3r_2$. Known as the "poor man's orthoscopic", the **TOLLES** has unfortunately zero eye relief. A negative flint eye cap, an innovation introduced by Hastings, increases eye relief no more than 0.1Fe. The field is restricted to 20˚, but transmission is very high, and there is only one potential ghost (in practice there are none). The design, originally intended to work at f/30, in fact works well down to f/10, after which spherical aberration becomes objectionable. The author has of late reworked Tolles' relationship for both spherical and chromatic correction, and has increased eye relief to a modest 0.3Fe; widened the field to 35˚ and shifted the field stop onto the edge of the first surface, giving the field of view a sharply defined boundary. Greenwood has made prototypes in a variety of focal lengths using BK7 crown, which exhibit excellent correction at f/15.

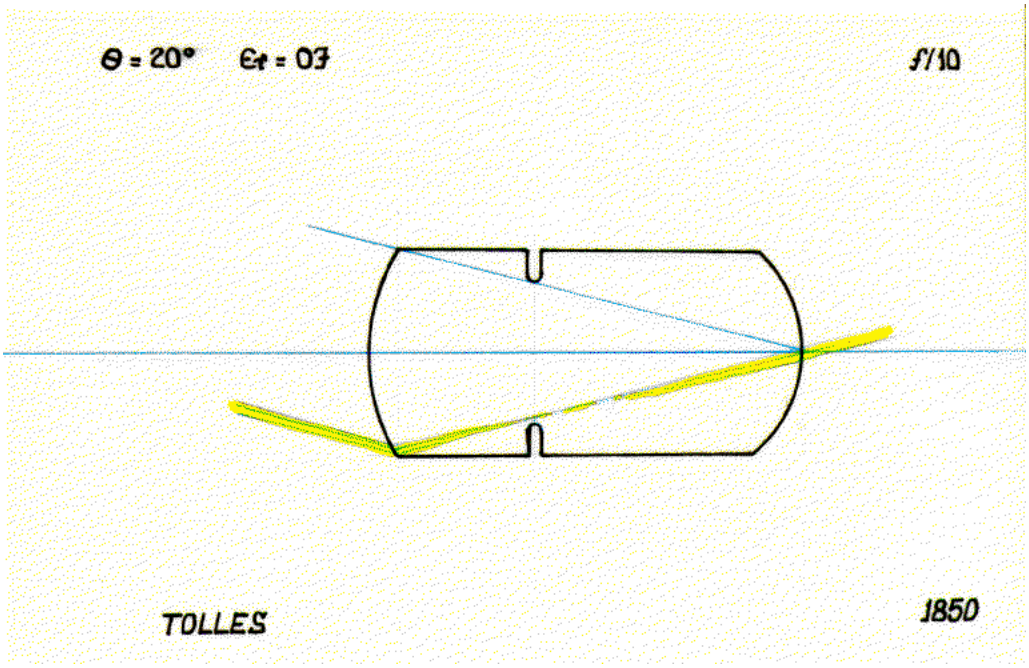

**VARIANTS OF SOLID EYEPIECES:**

No single element eyepiece, no matter what the form or figure on its surface can be corrected for both spherical and chromatic aberration. Following the manufacture of Chester Moor Hall's prototype achromatic doublet by the jobbing optician George Bass, and the work of Leonhard Euler and S. Klingenstierna on the geometrical method of simultaneously correcting both spherical and chromatic aberration in object-glasses, John Dollond assembled the first achromatic lens. It had plano-concave flint and equi-convex crown components, with focal length in the ratio of their dispersive powers. Dollond manufactured doublets in small sizes from about 1759, and employed them in microscopes and telescopes as objectives and as an inverting eyepiece.

**THE ACHROMATIC DOUBLET:**

Possesses a much wider field with superior edge definition to a simple Keplerian type, and was well suited to the shorter focal length achromatic refractors of the late C18th. It shares the same eye relief of about 0.9Fe. Lenses of this form were scarce and expensive to produce because of the difficulty in pouring bubble and striae free flint glass. It was not until 1828 when H. Guinand founded an optical-glass works at Choisy-le-Roi, on the principles of the research carried out by his father, Pierre Louis Guinand, a Swiss horologist of Les Brenets, for Joseph Fraunhofer, that this technological deficiency was rectified. During the French revolution of 1848, George Bontemps, an employee of Guinand, left for England bringing with him a number of French and Belgium sheet-glassmakers. Bontemps joined the newly founded Birmingham firm, Chance Brothers, and imparted his technical knowledge. Within a few years, English optical-glass production surpassed that established on the Continent.

It was only with the development of optical-glass production technology, and the availability of a variety of crown and flint glasses having differing refracting and dispersive powers. that it became feasible to design and manufacture achromatic lenses in any quantity.

**TWO LENS EYEPIECES:**

The first two element eyepiece; the **HUYGHENIAN** - was developed from the principles of refraction determined by Willebrord Snell and René Descartes, by the Dutch physicist Christiaan Huyghens in 1703. It may be justifiably regarded as the first intentionally designed eyepiece. Huyghens' concern was to minimise chromatic inequality of magnification, and provide a wider field by reimaging the objective using a field lens.

Suppression of lateral colour requires that emergent pencils of different wavelength be parallel. The equivalent focal length of a two lens combination is given by:

$$Fe = \frac{f_1 \cdot f_2}{f_1 + f_2 - d}$$ where d is the lens separation

If both lenses have the same refractive index, for a given $\Delta\lambda$ their focii will each alter by $\Delta f_{1,2}$
hence:

$$\frac{f_1 \cdot f_2}{f_1 + f_2 - d} = \frac{f_1 \cdot f_2 (1+\Delta f)^2}{f_1(1+\Delta f) + f_2(1+\Delta f) - d}$$

and neglecting powers of $\Delta f$ :

$$(f_1 + f_2)(1+\Delta f) - d = (f_1 + f_2 - d)(1+2\Delta f)$$

$$d = \tfrac{1}{2}(f_1 + f_2)$$

In the Huyghenian eyepiece $f_1 = 3f_2$ is the condition of minimum spherical aberration, therefore:

$$d = \tfrac{2}{3} Fe$$

and:

$$Fe = \tfrac{1}{2} f_1$$

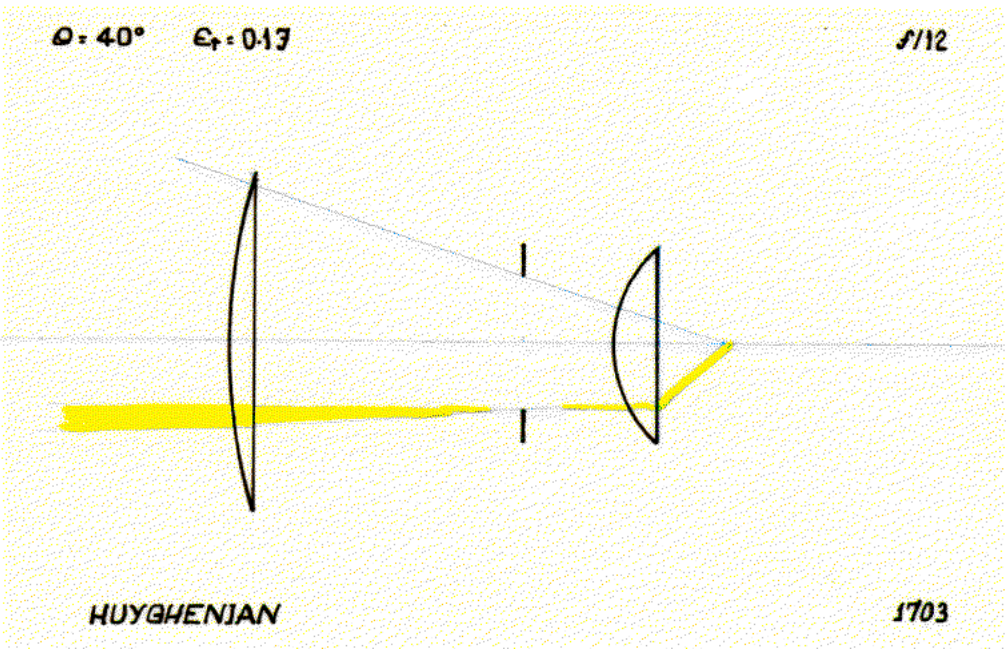

**TWO LENS EYEPIECES (cont.):**

**HUYGHENIAN (cont.):** Although lateral colour is corrected, the longitudinal aberrations are added, and this residual spherical and chromatic error, together with coma and angular magnification distortion, become objectionable at focal ratios faster than f/12. The apparent field is about 40˚, but eye relief is less than 0.3Fe. Also the field stop lies between the field and eye lenses, and in high powers becomes fringed with false colour.

**RAMSDEN** - the second two element design, devised by Jesse Ramsden the London instrument maker in 1783. It consists of two plano-convex crown lenses of equal powers, their convex surfaces turned inwards. Ideally for lateral colour correction,
where:

$$d = \tfrac{1}{2}(f_1 + f_2)$$

$$Fe = d = f_1$$

However this brings the field stop into coincidence with the eye lens, hence zero eye relief, and every imperfection on the field lens is thrown into sharp focus. In practice therefore d is reduced to between 0.8Fe and 0.6Fe, with increasing undercorrected lateral colour.

**RAMSDEN (cont.):**

The design is noted for its freedom from rectilinear distortion over a 35˚ apparent field, making it ideal for micrometers and finders, where cross wires are employed.

A recent modification using fluorite lenses increases the apparent field to 60˚ and reduces lateral colour.

Spherical aberration, coma and longitudinal colour become objectionable below f/8.

**VARIANTS OF THE HUYGHENIAN:**

In 1812 Wollaston discovered that a meniscus-shaped lens produced less longitudinal spherical aberration and gave a flatter field than a simple plano-convex field lens. The Dutch optician Mittenzuuey used this to modify the Huyghenian by incorporating a positive meniscus field lens and eye lens.

Later the astronomer George Biddell Airy widened the apparent to 45˚ by introducing a bi-convex field lens.

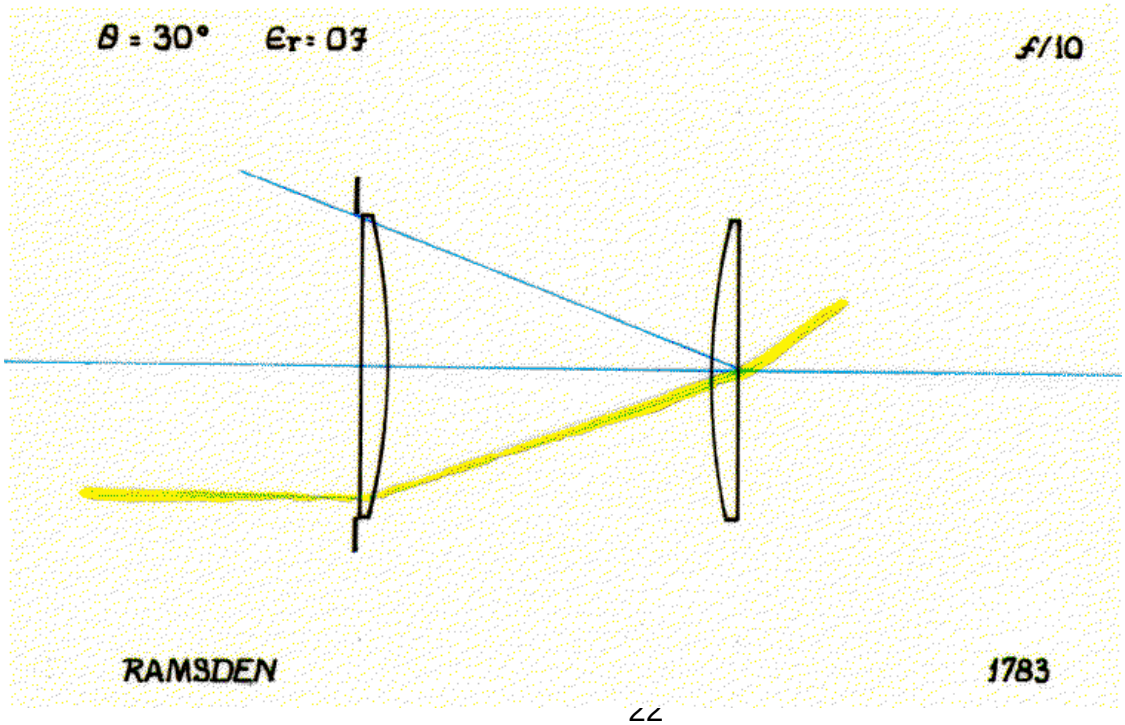

**VARIANTS OF THE HUYGHENIAN (cont):**

Almost a century later the American optician Hastings adopted an achromatic doublet eye lens, with a plano-convex field lens to increase eye relief and improve off axis performance at focal ratios down to about f/7.

**FURTHER VARIANTS OF SOLID EYEPIECES**:

Development of the achromatic lens on the Continent during the 1820's and 1830's was driven primarily by the desire to produce shorter focal length refracting objectives with imaging characteristics superior to those of the Newtonian reflector. In smaller diameters and shorter focal lengths, achromatic objectives found their way into the camera lucida and eventually the early camera. Chevalier supplied achromatic landscape lenses for the Daguerreotype camera in the late 1830's. Shorter focal lengths could be used as low power wide field eyepieces. The apparent field was still restrictive though, no more than 15°.

In the 1860's Hugo Steinheil and Max von Seidel (the mathematician who had recently established a theory of lens aberrations), simultaneously with John Henry Dallmeyer, developed the wide-angle rectilinear lens. The form of this lens comprised a pair of meniscus doublets about a field stop. The key to the success of this camera objective lay in the choice of glass. The components of each doublet differed as much as possible in refractive index yet lay as close as possible in dispersive power. The lower-index positive elements were inside, close to the stop, while the higher-index negative elements were outside. Among the glasses available in 1866 there were only a few flint glasses that met the requirements, and both Dallmeyer and Steinheil selected two flints, one light and one dense. The wide-angle version of this lens employed steeply curved meniscus doublets which worked well at f/18. Steinheil used this meniscus doublet as an eyepiece in some of their smaller brass refractors. The doublet was not only achromatic, it was also aplanatic (corrected for both spherical aberration and coma).

The driving force behind the establishment of the optical theory necessary for the design of multi-element wide angle lenses was not the astronomical telescope, but the microscope and photography. The first successful high-index crown glasses were manufactured by Abbé & Schott at the Jena glassworks in Germany.

Ernst Abbé (1840-1905), a young 26-year old physics professor at the University of Jena, was hired in 1866 by Carl Zeiss (1816-1888) to put his instrument workshop on a viable footing. Abbé worked first on the design of the microscope and by 1880 he realized that he needed some radically new types of glass to remove the secondary spectrum of a microscope objective. He persuaded the 29-year old Otto Schott (1851-1935), a glass maker from Witten, to join him in establishing a glass factory at Jena.

In the incredibly short interval of six years they were able to issue a catalogue containing 44 types of glass, many of which were entirely novel. At the low dispersion end were four phosphate crowns, which were interesting but unfortunately so unstable chemically that they had to be withdrawn. Next came three barium crowns, useful in reducing the field curvature of a compound lens, followed by a series of borate flints, which were the glasses Abbé needed.

An achromat composed of a high-index barium crown element combined with a low index borate flint has a smaller Petzval sum but increased spherical aberration, than the Chevalier landscape lens.

If r is the surface radius of curvature of the anastigmatic image, f the focal length of an equivalent thin lens, and the refractive indices of the lens and spaces separated by the surface, the Petzval sum $\frac{1}{r} = \sum \frac{1}{f\mu} = \sum \frac{\mu' - \mu}{\mu\mu' r}$

During the following years a number of Barium crown glasses in the Schott catalogue steadily increased, and these glasses were immediately adopted by lens designers in an effort to reduce astigmatism in photographic objectives.

Steinheil's development of his aplanatic rectilinear lens led by 1880 to the Group Aplanat, which had surfaces whose curvature shared a common centre. This novel design of photographic objective underlay the **MONOCENTRIC** eyepiece. The lens consisted of a thick cemented triplet, with an equi-convex barium crown flanked by borate flint negative meniscus elements. Another assymetric version had an even thicker crown and forward flint with a thinner double extra-dense flint eye lens. These are the most nearly perfect eyepieces ever designed, having highly corrected achromatic and orthoscopic fields, flat over the greater part, and very dark. Eye relief is as high as 0.85Fe, but the apparent field is restricted to 28˚. An aspheric design by Richard A. Buchroeder of Tuscon, possesses a 40˚ field with reduced eye clearance, but has not been manufactured. Steinheil Monocentrics may be used down to f/6 or f/5.

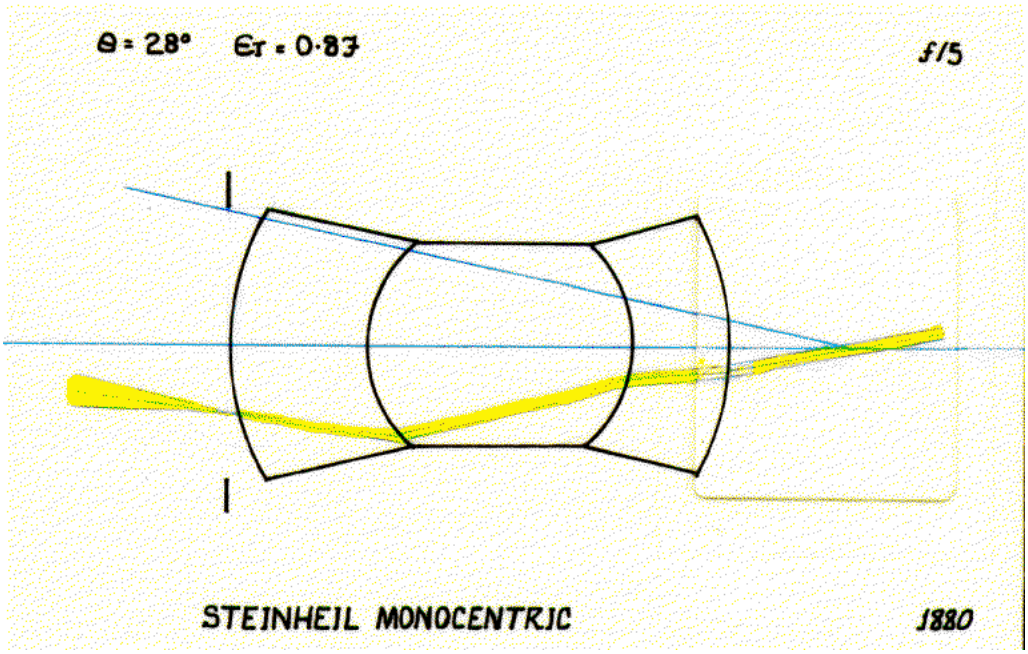

In the mid 1880's Dr. Hugo Schroeder produced a high power design of triplet with a wider, flatter field, suited to micrometric work because of the comparatively large distance between the lens' first surface and the web. The triplet lens was composed of a dense flint plano-convex between two lenses of soft crown. The aperture of the lens could be half its focal length without any sensible defect in angular magnification or rectilinear distortion.

In 1890 Ernst Abbé and Paul Rudolph turned their attention from microscope to photographic objectives. They felt their work on what Abbé had come to term 'apochromatic' lenses could have a useful application in the field of photography. Their initial lens consisted of a thick cemented triplet in the middle of an existing symmetrical lens called the Periscopic. A German patent was taken out on behalf of Zeiss by Rudolph in 1911, registering their

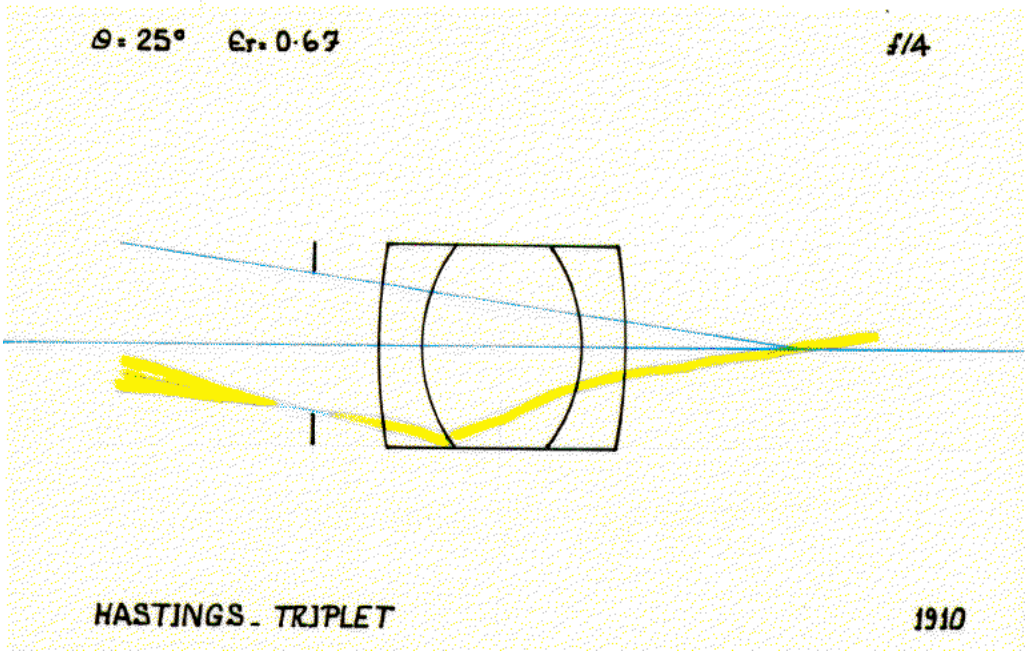


triplet design. Zeiss marketed this Monocentric variant in several forms until the mid-1950's.

There are two other designs of cemented triplet; the **HASTINGS LOUPE** and the assymetric **LOUPE TRIPLET** - both developed in the 1910's. They are still the most common form of achromatic, wide-angle, hand magnifier.

**ORTHOSCOPIC EYEPIECES:**

The quest for distortionless imaging characteristics of photographic objectives in the 1850's and 1860's led C.A. Steinheil to design the Periscop lens in 1865. Prior to this in 1859 the Petzval Orthoskop appeared. The fundamental property of any orthopscopic lens is that it should have a wide flat field free from rectilinear distortion and angular magnification distortion.

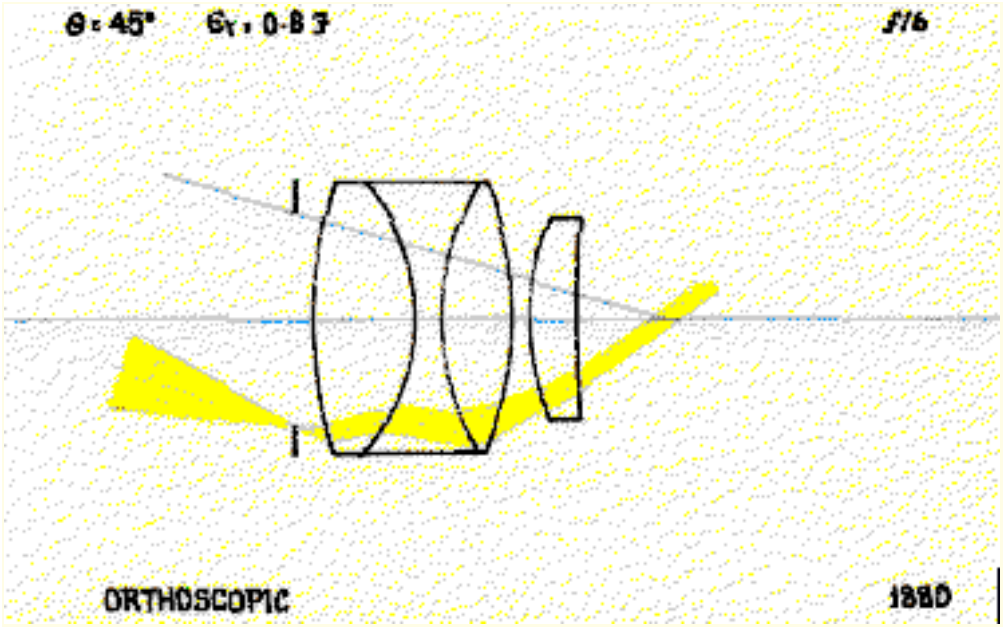


In 1880 Ernst Abbé brought out an Orthoscopic eyepiece for Zeiss. The field lens is an overcorrected triplet combination with a negative component in the middle, followed by a simple plano-convex eye lens, convex surface almost in contact. This eyepiece is remarkable for great eye clearance and has given rise to a whole family of eyepieces, some of them of very complex form. In Abbé's design hard crown and dense flint glasses were used to secure an apparent field of 30˚, and an eye clearance of 0.8Fe. The Zeiss Orthoscopic patented in 1930 made use of less usual glasses; barium crown, extra-dense flint and borate flint. This increased the apparent field to 40˚ at f/5. In the mid-1930's Barr and Stroud patented an orthoscopic eyepiece in which the simple eye lens is bi-convex, with the steeper convex surface remote from the eye having a parabolic figure. This widened the distortion free field to 64˚ and the eye clearance was extended to 0.91Fe. The glasses used were boro-silicate crown and extra-dense flint.

Another aspheric variant was designed for Zeiss, probably by Robert Richter in 1934.

According to the British patent, the third surface (a steeply convex face of an over-corrected eye triplet) was parabolized and provided a wide-angle eyepiece with a 53˚ field in which distortion was eliminated; the lateral colour removed without use being made of more than one lens of flint glass; astigmatism reduced to that resulting from the Petzval curvature, and spherical aberration of the exit pupil eliminated or marginally reversed. Eye clearance was reduced slightly to 0.66Fe.

Another 1941 variant called the **Kalliscopic Orthoskop** was probably designed for Zeiss by either Albert König or Richter. It had a thicker lead-

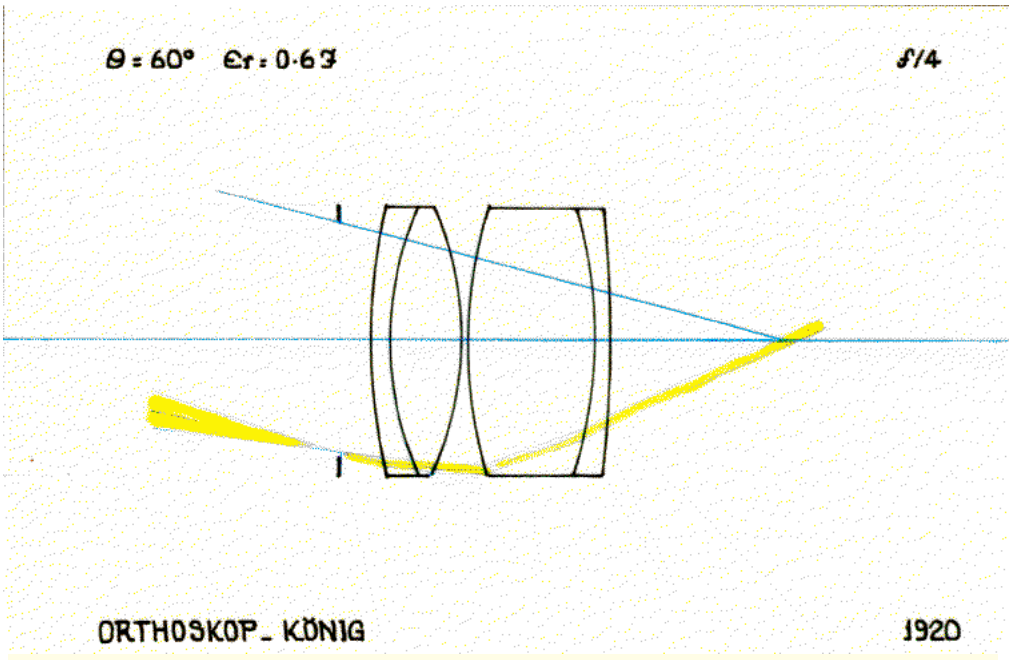


ing element to the field triplet and a field of 43˚ at f/4.5, and 0.83Fe eye relief.

In 1924 the Goerz company patented two orthoscopic types having 1-3-1 & 2-3-2 configurations. The 1-3-1 had a central triplet similar to the Abbé Loupe, flanked by a plano-convex eye lens and a meniscus field lens. This modification had a 60˚ field and 0.59Fe eye clearance and used barium crown and extra-dense flint glasses. The 2-3-2 had a 55˚ field, 0.46Fe eye clearance and used boro-silicate crown and dense flint glasses. Both designs were used in military binoculars

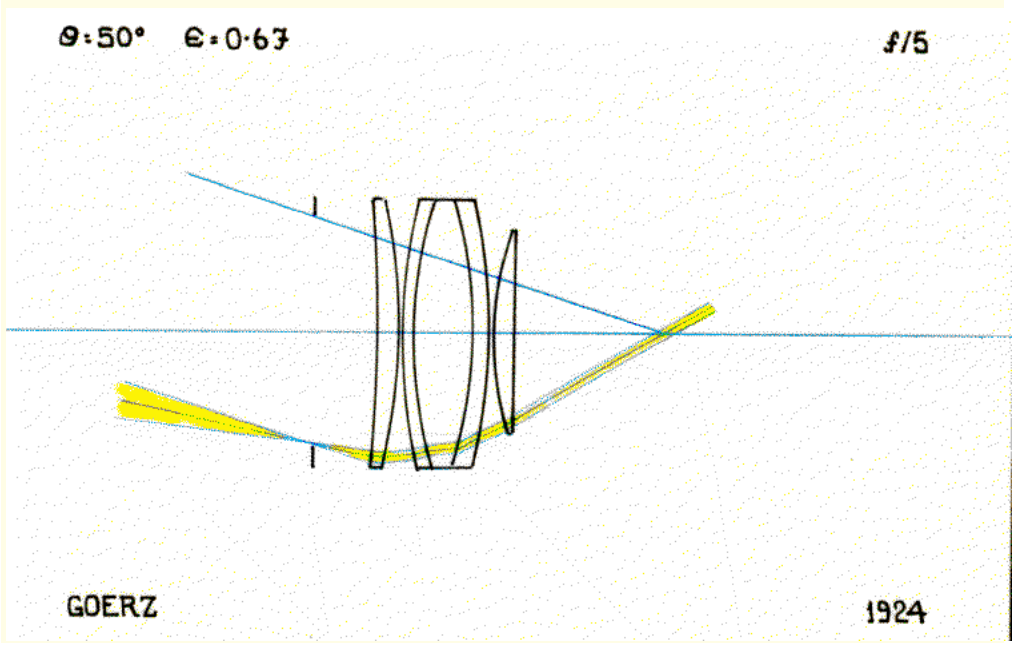

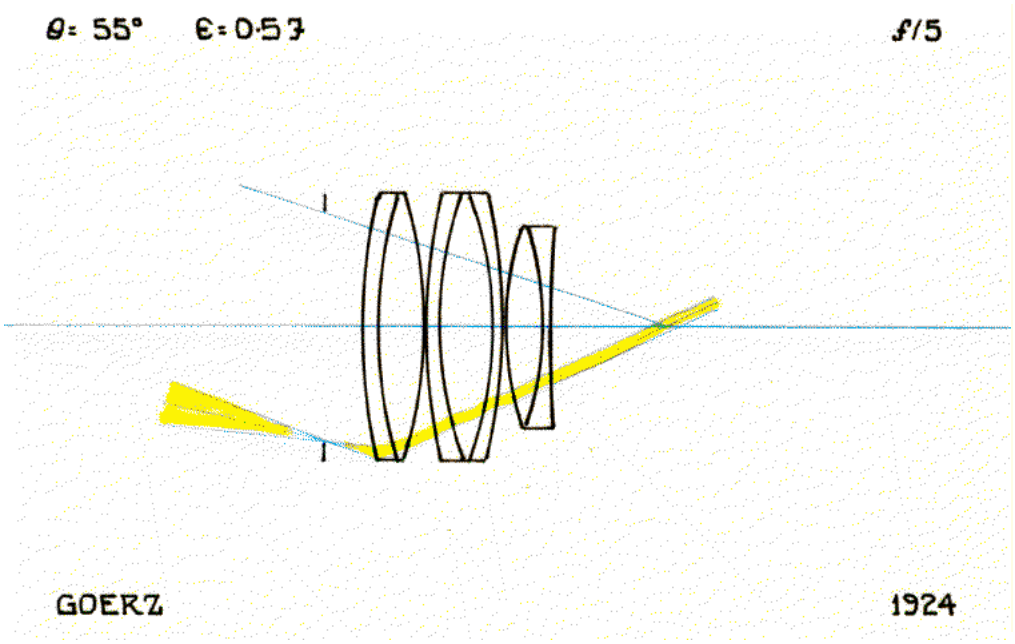


**GALOC -**

Another wide angle variant, designed by Galoc in 1935 for military use has a triplet field lens and a meniscus doublet eye lens. The apparent field is 75° at f/4 and eye clearance 0.8Fe. This design is still used in modern military optical equipment. Two modifications designed for the M.o.D. (Ministry of Defence) have very flat 60° fields at f/4 completely free from rectilinear distortion, lateral colour, and minimal astigmatism. These eyepieces are highly corrected with extended eye clearance of 1.2Fe.

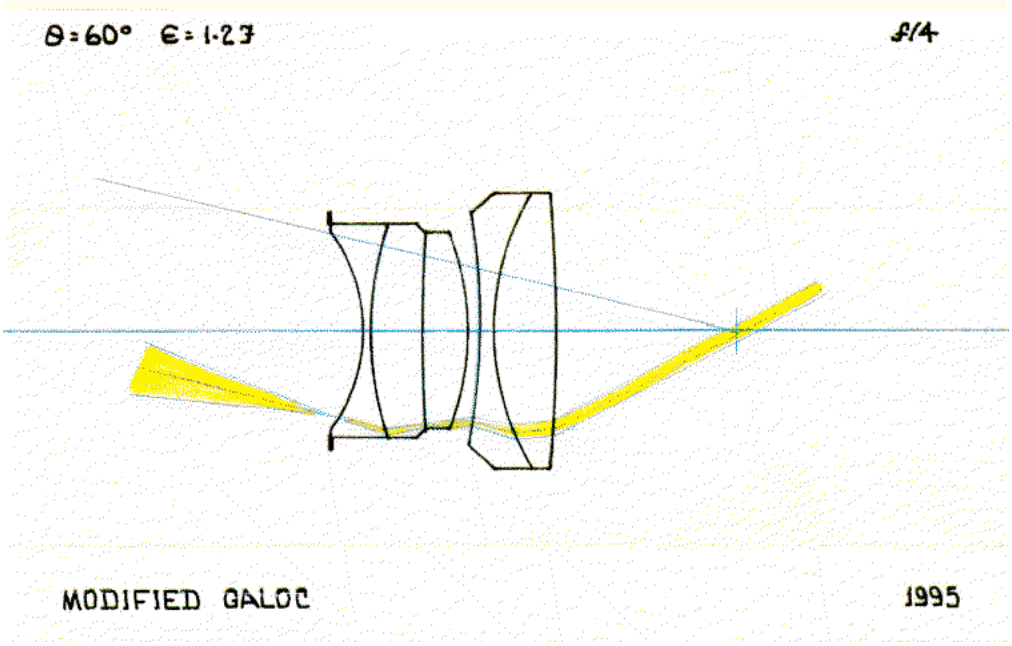

**ACHROMATIC & WIDE-FIELD EYEPIECES:**

The achromatic wide-field eyepiece is a development of the positive Ramsden. Spherical aberration and longitudinal chromatic aberration become objectionable in the simple Ramsden at focal ratios faster than f/8. The field is restricted by coma (lateral spherical aberration) because it is impossible to correct coma using elements of the same glass type.

The availability of flint glass free from striae and bubbles from the mid-1840's made it feasible to design and manufacture, for the first time, an achromatized Ramsden which was free of these restrictions.

**The KELLNER -**

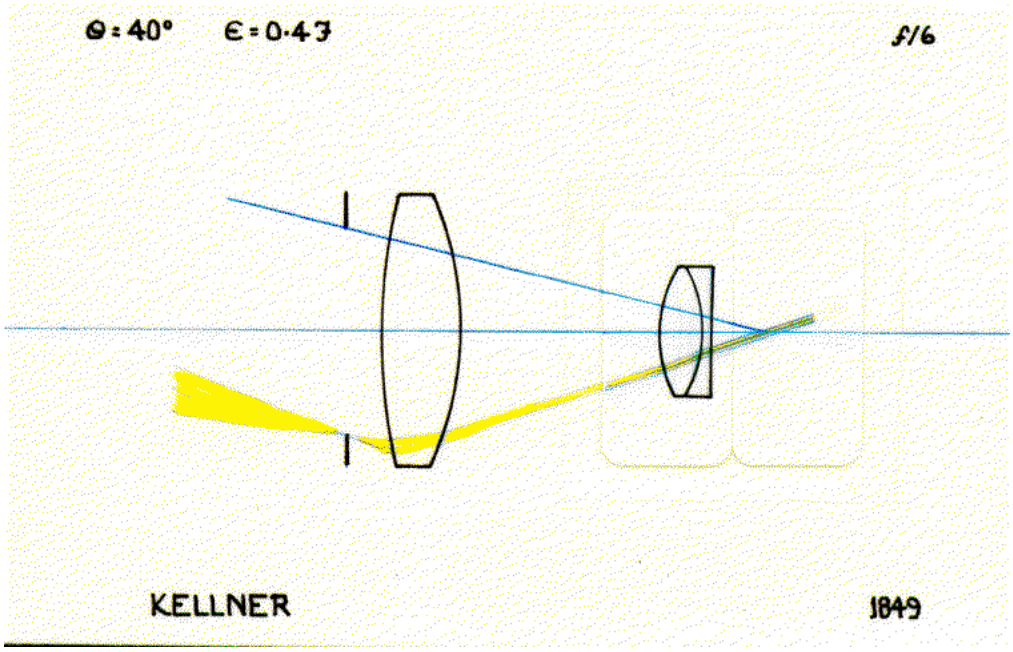


This was done by an Austrian microscopist called Karl Kellner and described in his 1849 publication, "Das Orthoskopische Ocular". The original Kellner eyepiece was intended for use as a microscope eyepiece and had a plano-convex field lens, plane surface

**The KELLNER (Cont.):**

towards the field stop, and an over-corrected doublet eye lens with the plano-concave flint outwards. The field was not wide, only about 30° at f/6, and the eye relief a modest 0.4Fe. For the microscope this was a decided improvement, but the design needed some slight modification for use as an inverting astronomical eyepiece. Kellner widened the field to 45°f/6 by changing the form of the field lens from plano-convex to bi-convex, with the shallower face towards the field stop, and increasing the over-correction of the eye doublet to compensate. The increased power of the negative element also marginally extended the eye clearance to 0.45Fe.

The Kellner in this modified form gives wide, flat fields and excellent colour correction and orthoscopy. However the Kellner is notorious for ghosting, although modern anti-reflection coatings reduce the problem significantly.

**The PLÖSSL -**

A separate development of the Ramsden by Gustáv Simon Plössl in 1860 led to a class of orthoscopic, achromatic, wide-field eyepieces, referred to variously as the Symmetrical, the Dial-Sight, and the Plössl.

The force behind the technical innovations that enabled Plössl to design this class of eyepieces in the 1860's again lay with the needs of the photographer and microscopist.

In 1839 he is reported to have made a Daguerrotype camera and modified the Chevalier landscape lens. In the year of his death at the age of 74 the Optical Society of Vienna named a medal in his honour.

Plössl's modification of Chevalier's achromatic doublet anticipated that of Steinheil and Dallmeyer by almost quarter of a century.

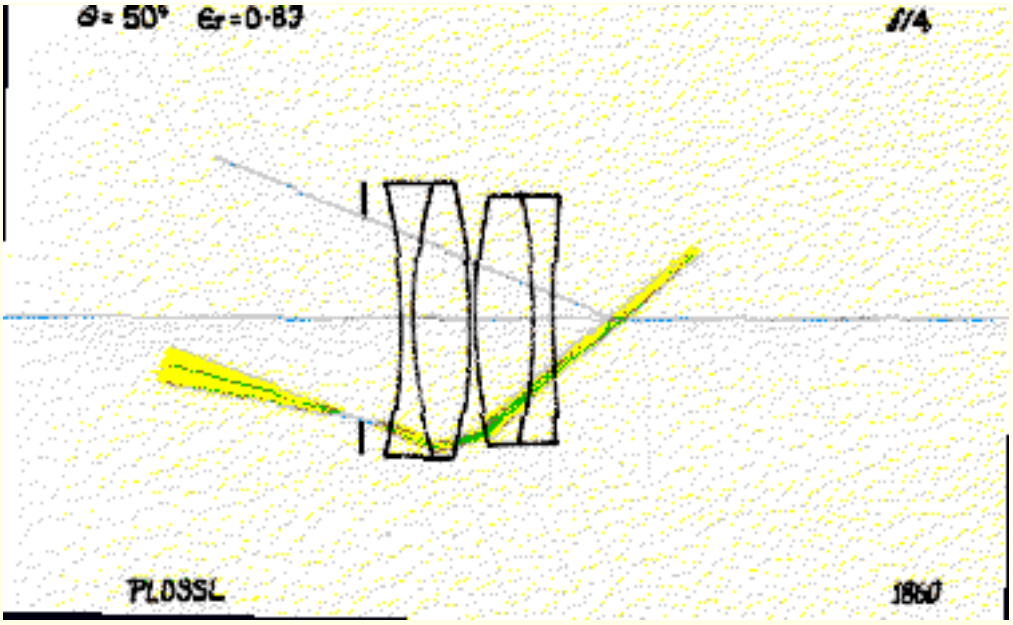


G.S. Plössl was apprenticed to Voigtländer in 1812 when he was 18, and in 1823 he decided to establish his own company in Vienna. There he made microscope objectives, which he designed himself, and opera glasses. At the 1830 Scientific Congress in Heidelberg he received a prize for the best achromatic microscope.

The first Symmetrical eyepiece consisted of a matched pair of Plössl's modified achromatic and aplanatic doublets, with their crown bi-convex elements facing inwards. Their separation was about 0.5Fe, so eye relief was generous (0.8Fe) and the apparent field about 40° at f/6. Orthoscopy and lateral colour correction were excellent down to f/4.

The true Plössl eyepiece, as manufactured by Carl Zeiss, and after W.W.II by ets Clavé and now Kinoptique, has the crown elements almost in contact (the separation can be as little as 2 thousandths of an inch), and the eye doublet has a shorter focal length than the field doublet. This widens the apparent field to 45° at f/6 at the expense of eye clearance (0.7Fe). In its best form, this design is distortion free, and has no detectable lateral colour, even at f/4. Fields are dark and ghost free, and contrast is excellent. However, unlike the Abbé Orthoscopic and its derivatives, where longitudinal spherical correction is zero on axis, the assymetric form of the Plössl leads to a zonal correction and the sharpest imagery does not occur on axis but some 30% towards the edge of the field of view. At low to medium powers this is of no consequence, but it is noticeable at high powers (exit pupils less than 1.5mm).

The third class of this form of eyepiece is called the Dial-Sight. It has achromatic and aplanatic doublets with plano-concave elements facing inwards, and separated, again typically about 0.5Fe. This gives greater eye clearance (0.8Fe), but also a flat field completely free from rectilinear distortion.

This variant is intended to be used with a graticule divided for micrometric adjustment. It became known as the Dial-Sight through its use in military target rangefinding optics. The range was set using a moveable graticule driven by divided drum heads.

**ACHROMATIC WIDE-FIELD DERIVATIVES:**

Both the achromatic Ramsden and Kellner, and the Symmetrical and Plössl, spawned a plethora of wide-angle derivatives.

**DERIVATIVES OF THE KELLNER:**

**COOKE 3 LENS -** In a successful attempt to improve the performance, Harold Dennis Taylor (1862-1943) of Cooke Troughton & Simms, resorted to a triple form of eye lens and arranged to fix the position of the exit pupil with respect to the eye lens by varying the power of the field lens to suit the focal length of the objective, This eyepiece yielded a remarkably flat field simultaneously corrected over 50° for both angular magnification and rectilinear distortion. The design when matched to the objective was also truly aplanatic. Eye clearance was a modest 0.45Fe.

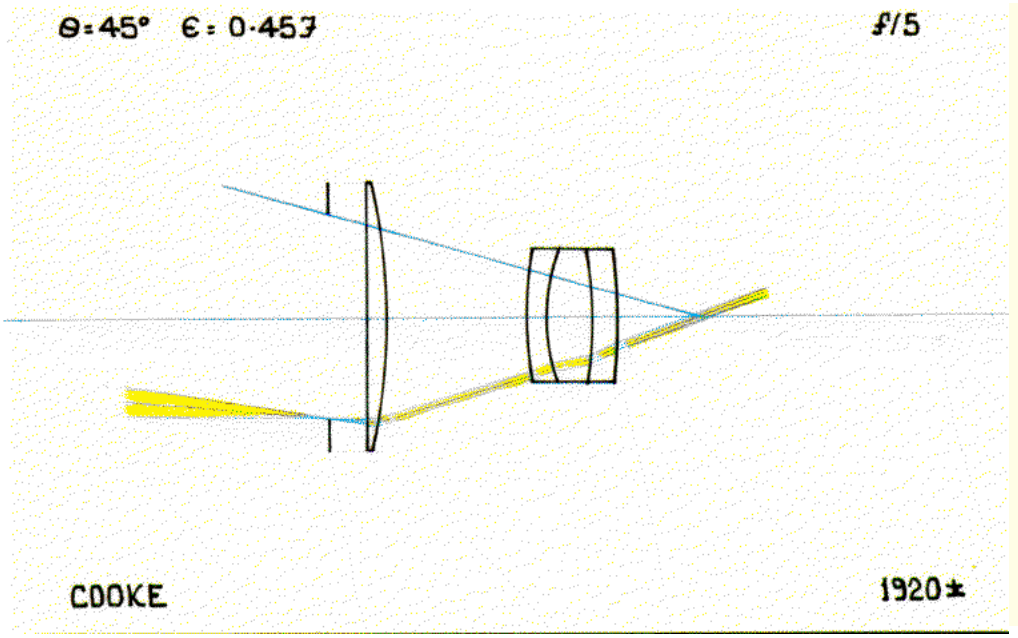

**COOKE 5 LENS -** Dennis Taylor took out a British patent on behalf of Cooke's in 1900 for the 3 lens type and in 1918 patented a 1-3-2 computed design which also possessed Kellner characteristics. It consisted of a simple field lens having approximately the focal length of the objective, the duty of which was to collimate the principal rays and fix the position of the exit pupil. The triple collective lens had the crown glass elements in the centre and the doublet eye lens was of the Steinheil form. This type of eyepiece was made in large numbers and could be used with ot without the field lens. In the former case an apparent field of 65˚ at f/5 was possible with excellent performance and good eye clearance (0.69Fe).

**KELLNER II -** Other attempts were made to improve the performance of the Kellner by introducing a fourth lens, and a Zeiss patent taken out by König describes an eyepiece of this type in which the eye-lens system consists of a simple collective lens followed by a doublet which may be either converging or diverging but which was responsible for the achromatism of the eyepiece as a whole. The power of this doublet is not more than half the power of the single lens and the concave side of its cemented surface faces the simple lens. This eyepiece is therefore of the 1-1-2 type, and has an apparent field of 50˚ at f/6 but only 0.32Fe eye clearance.

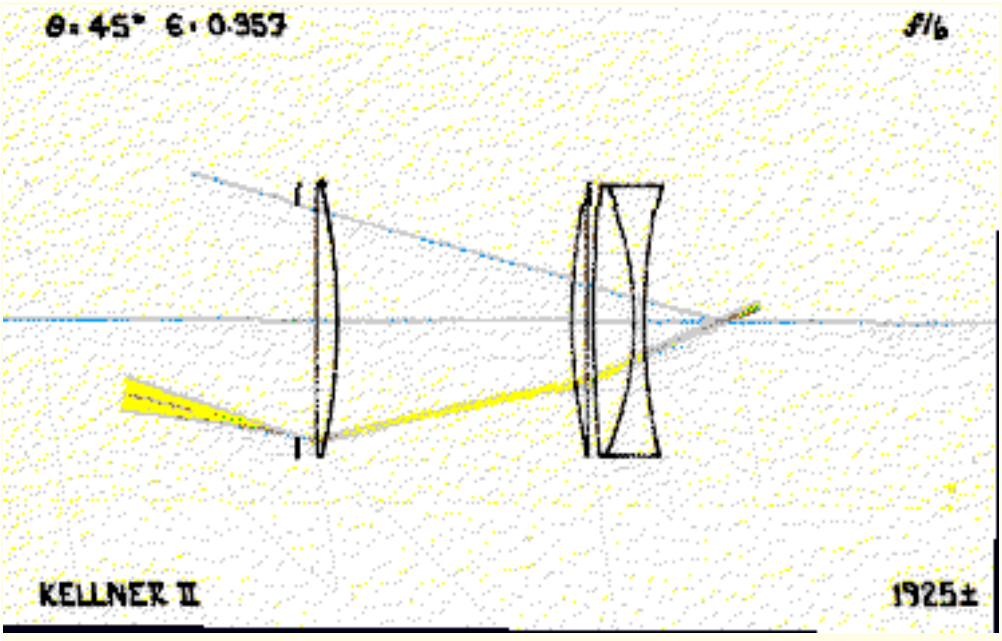


Dennis Taylor worked entirely by algebraic formulae, which he developed himself, and he claimed that he never traced any rays. When the design was as good as he could make it, the actual lens was fabricated and examination of the image on a lens-testing bench suggested changes that should be made to improve performance.

**ZEISS WIDE-ANGLE -** An example of the type in which the positive lenses both face the focal plane and which can be used with or without a field lens is also specified by Zeiss. The two doublets are similar in form and when used with a field lens an apparent field of 70˚ at f/5 was obtained with 0.32Fe eye clearance.

**KÖNIG WIDEFELD -** A 3-2-1 form by Zeiss designed by König having a 67˚ field and 0.72Fe eye clearance. The glasses used were BK7, SF12 and LaFN3 lanthanum glass.

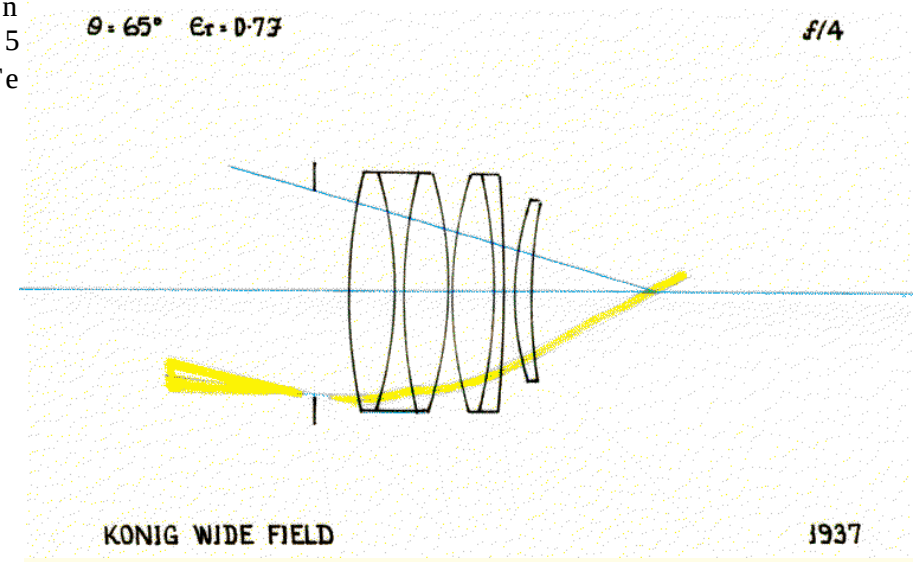


**STRAUBEL -** A 2-2-1 lens by Zeiss in which the apparent field is 70˚ at f/5 and eye relief 0.56Fe. The glasses used were dense flint, hard crown, and a low index, low dispersion FK3 flint.

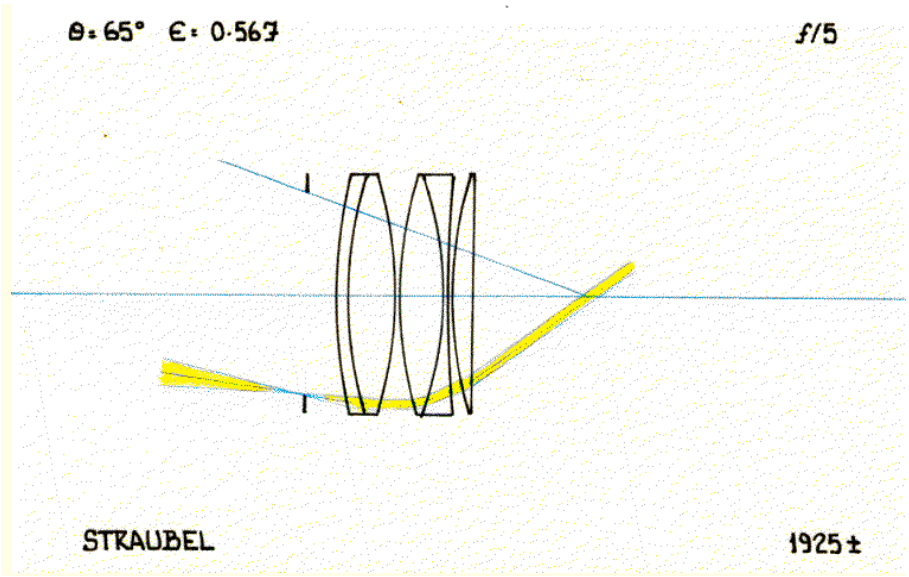


Another type of eyepiece of unknown origin is a 2-2-2 construction. This type will give an apparent field of about 60˚ at f/5 and 0.72Fe eye clearance. The glasses used were extra-dense flint and hard crown, barium crown or borate flint.

**ZEISS? WIDE-ANGLE (ORIGIN UNKNOWN) -** A 2-3-1-1 form having a 63˚ field and 0.7Fe eye clearance. The glasses used were boro-silicate hard crown and extra-dense flint.

**EURYSCOPIC III -** A Kellner type of wide field eyepiece manufactured by the Ferson Optical Company of Biloxi, Mississippi. (Euryscopic: from the Greek: to see wide). The separation of field and eye lens was reduced, and the field lens equi-convex. This widened the field to 50˚ at f/4. Eye relief was the same at 0.46Fe.

**BERTELE -** Designed for Steinheil by Ludwig Jakob Bertele (1900-1985). The patent describes an eyepiece of 1-1-2 form, intended for use in military binoculars, and therefore somewhat over-corrected. It possesses a 70˚ field at f/5 and eye relief 0.8Fe. According to the designer, "*its advantage lay in the elimination of every deteriorating influence of the curvature (of the field), but above all in the suppression of large air spaces. In the main the improvement is however obtained owing to the use of a strongly bent ocular lens of meniscus shape.*" The glasses used are SK2, FK5 and SF12. The design is noted for its remarkable orthoscopy.

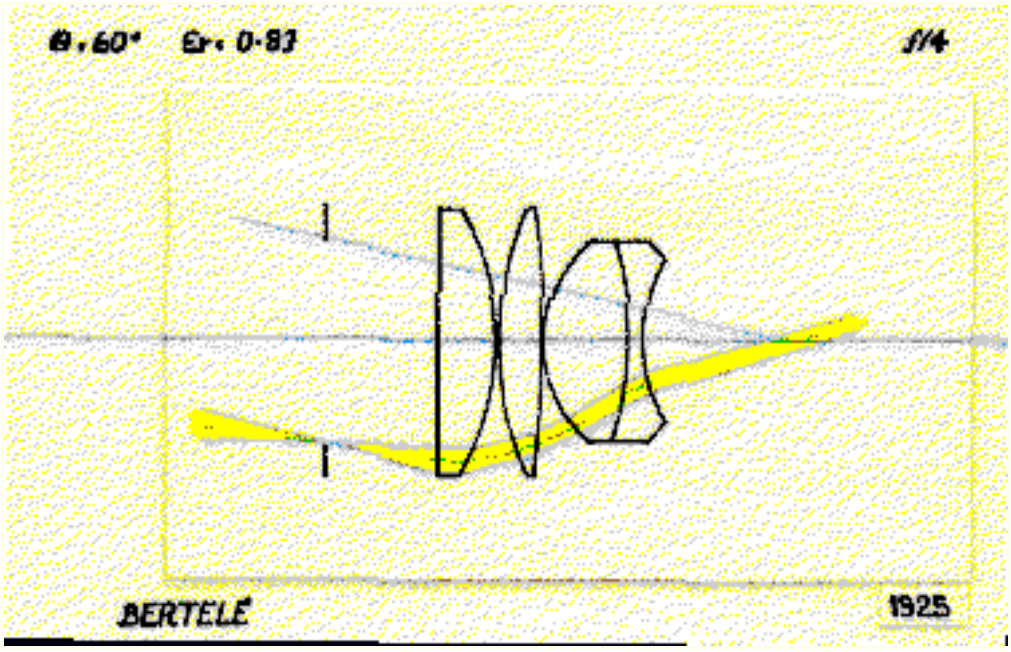

**KÖNIG -** A. König patented a 1-2-1 design for Zeiss having a 55˚ field and 0.67Fe eye clearance, using boro-silicate crown and double extra-dense flint, giving a sharp change of index at the cemented surface.

**KÖNIG II -** König patented an improved 2-1-1 design for Zeiss, having the same 55˚ field but extended eye relief of 0.92Fe and superior orthoscopy. The glasses used are SF1 and BK7.

**SCHULZ -** A modification of König's design having a 55˚ field and extended eye relief of 0.8Fe.

**TRIPLANE -** A post W.W.II design; another modified Kellner marketed by Vixen and Swift during the 1960's. The specification was almost identical to Kellner's original achromatic Ramsden. Its performance was poor.

**RKE -** A 2-1 modified Kellner similar to König's 1915 2-1 design. RKE stands for Reversed Kellner Eyepiece. It was designed for Edmund Scientific by David Rank. It has a 45˚ field at f/6 and 0.9Fe eye relief.

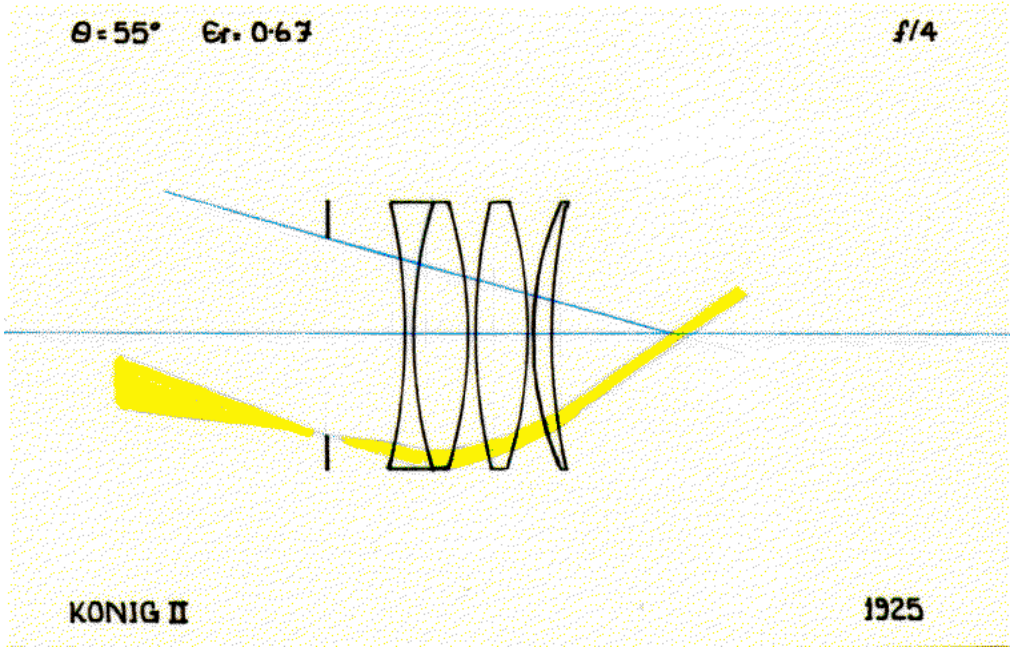


Both these designs compare favourably to the Orthoscopic, despite the additional pair of air-glass surfaces.

**WIDE ORTHOSCOPIC -** A modified Kellner of 1-2-2 form sharing similarities to Taylor's Cooke 5 lens design, having a distortion free 50˚ field and 0.5Fe eye relief.

**DERIVATIVES OF THE PLÖSSL AND SYMMETRICAL:**

The first wide-angle modification of the Plössl was the aplanatic eyepiece of Dr. Otto Schröder, described in Gill's articles on telescopes in the 9th. edition of the Encyclopaedia Brittanica. The glass employed is referred to as Dauget's crown (Cb1) and flint (Fb1). It comprised a pair of achromats spaced at 83% their effective focal length. The crown elements being plano-convex, plane surfaces facing the eye, and the flints being concave meniscus. Eye relief was 0.54Fe, and the apparent field 72˚. This design was initially employed by Schönfeld in his southern Durchmusterung, and subsequently marketed by Browning.

Zeiss' modification of the Plössl, and the subsequent incorporation of the field lens to widen the field, led Heinrich Erflé to design the first true wide-angle eyepiece for military use in 1917.

**ERFLÉ I -** A 1-2-2 design having a 60˚ field but eye relief only 0.3Fe. The glasses used were SF2, PSK3, FK5 and SF10.

**ERFLÉ II -** A 2-1-2 design using the same glass types having a 70˚ field and 0.6Fe eye clearance. Patented after Erflé's death in 1923.

**ERFLÉ III -** A 1-2-2 design using the same glass types having a 55˚ field and eye clearance of 0.32Fe. Patented after Erflé's death in 1923.

**KAPELLA -** Patented after Erflé's death in 1923 for Zeiss by Kapella, one of his assistants. A 1-2-2 design having a 70˚ field and 0.685Fe eye clearance. The glasses used were BK1, SK15 and FN11.

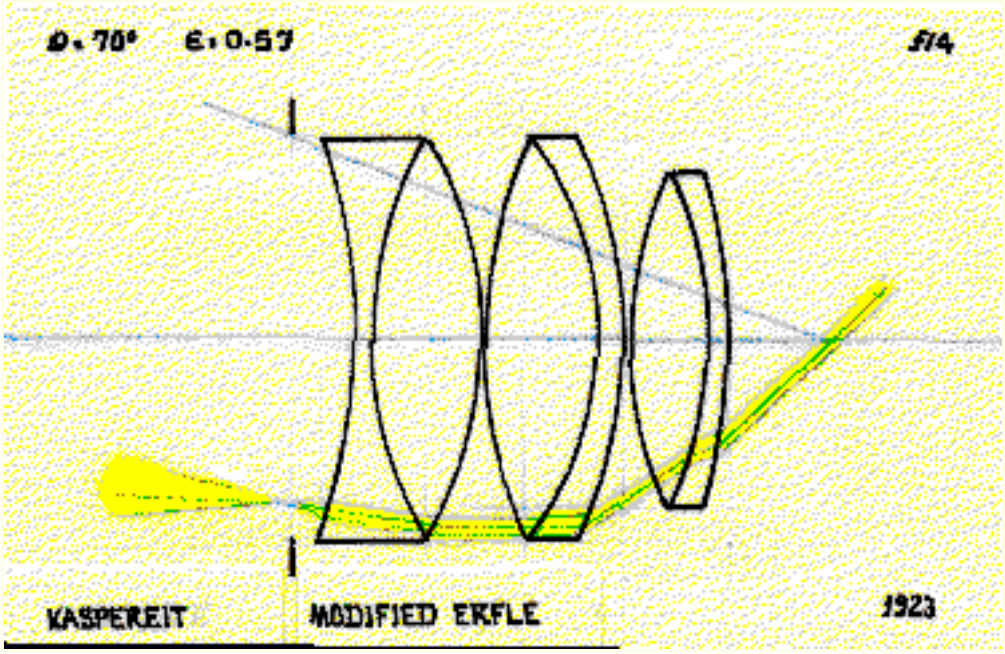


**KASPEREIT -** A modification of Erflé's designs by Kaspereit having a 2-2-2 form, giving fields in excess of 68˚ and eye relief 0.3Fe+. The glasses used in modern variants are SF2, BK7, SK20 and SF10. Some W.W.II (World War II) variants using Thorium or Uranium glass have fields wider than 70˚.

All these Erflé types and their derivatives suffer from lateral colour, astigmatism and rectilinear distortion.

**ZEISS ASTROPLANOKULAR -**

A 2-1-2 eyepiece introduced by Zeiss in 1955, sharing similarities with the Erflé II. It is noted for its excellent orthoscopy and well controlled angular and rectilinear distortion, lateral colour and astigmatism over a 50° field. Eye relief is 0.8Fe.

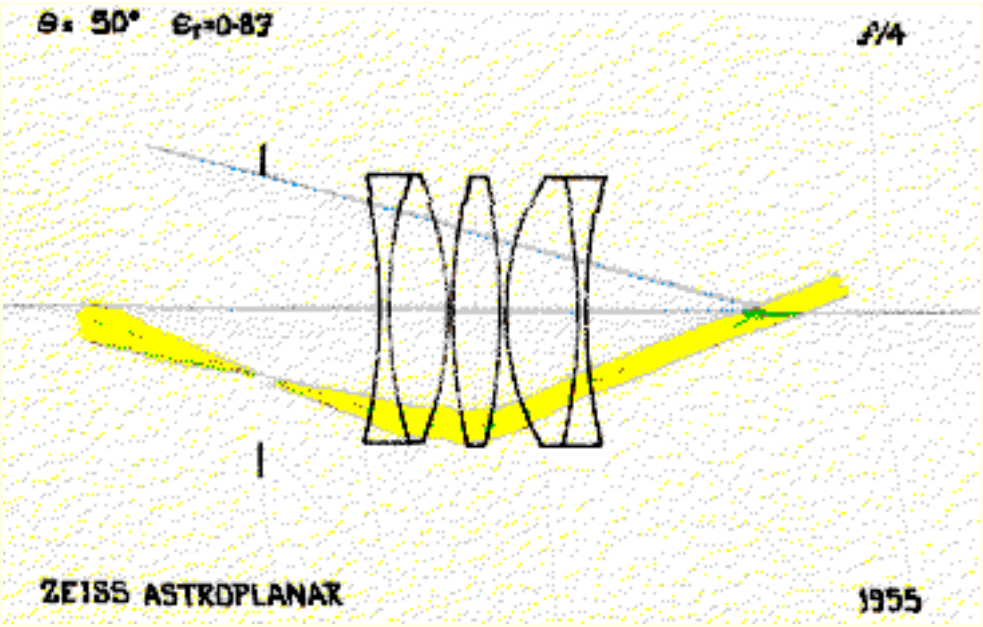


**BRANDON ORTHOSCOPIC -**

It may seem odd to include an thoscopic eyepiece der the generic form the Plössl. The andon eyepiece is wever a reversed symetric Abbé duplet, signed by Chester andon, an American tical and instrument signer, in 1942. It ares many similari- s in performance to e Zeiss symmetrical. is eyepiece is noted its high contrast ost free 50° field and tended 0.8Fe eye clear- ce. Manufactured by nonscope, it remains the sole American made eyepiece.

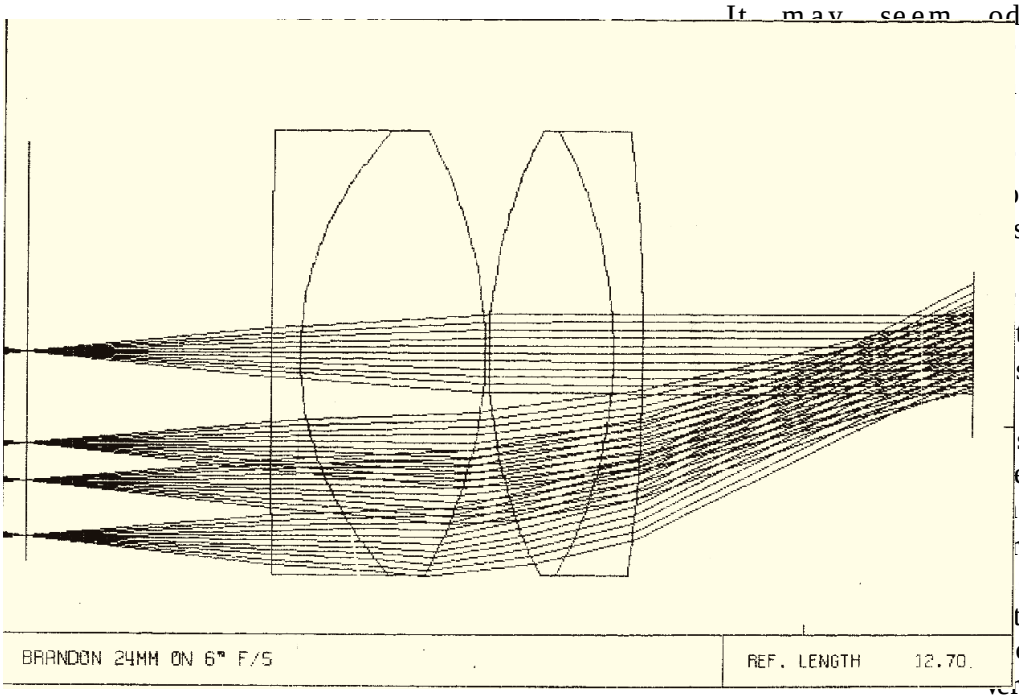

**KALLIPLAN -**
(from Greek: beautiful + flat)

Another orthoscopic design by Greenwood based on the Symmetrical, having aspherized (hyperbolic) concave external surfaces, and a Petzval surface matched to the telescope objective. It is a long focal length eyepiece with 0.8Fe eye clearance.

**PANSCOPIC -**
(from Greek: to see all)

A 1-2-1 design by Greenwood having a wide, flat 70˚ field but only 0.3Fe eye clearance. The field lens is a bi-convex crown and the eye lens a steep plani-convex crown. Aberrations of the field and eye lens are compensated by a highly over-corrected but almost zero power collecting doublet. The design suffers from slight ghosting and some lateral colour and astigmatism but its orthoscopy is good and transmission and contrast excellent.

**PLATYSCOPIC -**
(from Greek: to see flat)

A 1-2-2 design by Greenwood using the same mid-lens compensating collector as the Panscopic but an achromatic and aplanatic eye doublet. The field is widened to 76˚, but eye clearance reduced to only 0.25Fe. Lateral colour and astigmatism and coma are much suppressed, and good orthoscopy maintained.

**PANOPTIC -** A modified Plössl designed for Takahashi and Tele Vue having a 2-1-1-2 form. It has a highly corrected 68˚ field and 0.7Fe eye relief. Orthoscopy is excellent and lateral colour and astigmatism suppressed. Contrast is also excellent.

**WIDE FIELD -** Another 2-1-1-2 design similar to the Panoptic having a 65˚ field and 0.6Fe eye relief.

**WIDE SCAN -** A similar 2-1-2 design to the Zeiss Astroplanokular, having a 65˚ and 1.2Fe eye relief. Uses an integral Barlow in shorter focus forms to maintain eye clearance.

**SUPER WIDE ASPHERIC -** A 2-1-2-1 design by Takahashi sharing similarities to the Wide Field but having a single bi-convex mid-lens and a weak meniscus eye shell having an aspherized concave surface to eliminate residual spherical aberration of the exit pupil. The field is highly corrected over 67˚ at f/4 and eye clearance 0.75Fe.

**LEITZ WIDEFELD -** A 2-1-1-3 design by Leitz, sharing similarities to the Panoptic but having a weak meniscus eye shell bonded into the eye surface. The concave surface is aspherized to eliminate spherical aberration of the exit pupil. The field is highly corrected over 88˚ at f/3.5, and eye clearance 0.7Fe. Rectilinear distortion is very marked though; at 30% the geometric field is only 70˚.

**LE -** Another 2-1-2 design similar to the Zeiss Astroplanokular, but having an integral Barlow and no eye doublet in short focus form to maintain eye clearance. It has a highly corrected 52˚ field and extended 1.2Fe eye relief.

**LV -** Yet another 2-1-2 design with an additional integral Barlow to provide constant 20mm eye clearance. This design uses Lanthanum glass.

**COMPENSATING EYEPIECES:**

Compensating eyepieces correct field curvature and off axis aberration of the objective. All compensating designs have an internal focal plane.

**SHOEMAKER -** A 1-1-1-1-2 design having a flat, coma free 43˚ field at f/10 and 1.0Fe eye clearance.

**TUSCON ASPHERIC -** A 2-2-2 design by Clarke, basically an achromatic Huyghenian combined with a field flattener known as a Smyth lens, after C. Piazzi Smyth who first suggested such a device in 1874. The apparent field is 40˚ at f/6 and eye clearance 1.0Fe.

**CLARKE -** A 1-1-1 design by Clarke using a non-achromatic version of the Tuscon, corrected for lateral colour over a 50˚ field at f/6. Eye clearance is 1.0Fe.

**KLEE PRETORIA -** A 2-1-2-1 design by Klee and McDowell specifically intended to correct the coma of an f/4 Newtonian telescope. The field is flat over 50˚ and contrast excellent. Eye clearance is 0.7Fe.

**NEGATIVE-POSITIVE EYEPIECES:**

The first computer auto-optimized design was the Zeiss 1977 **FLEISCHMAN** - a 1-1-2-1 configuration using a negative field flattener. It is not certain whether the eyepiece was ever manufactured. The 50˚ field is highly corrected, all off axis aberrations and distortion being well suppressed. Eye relief is 1.13Fe.

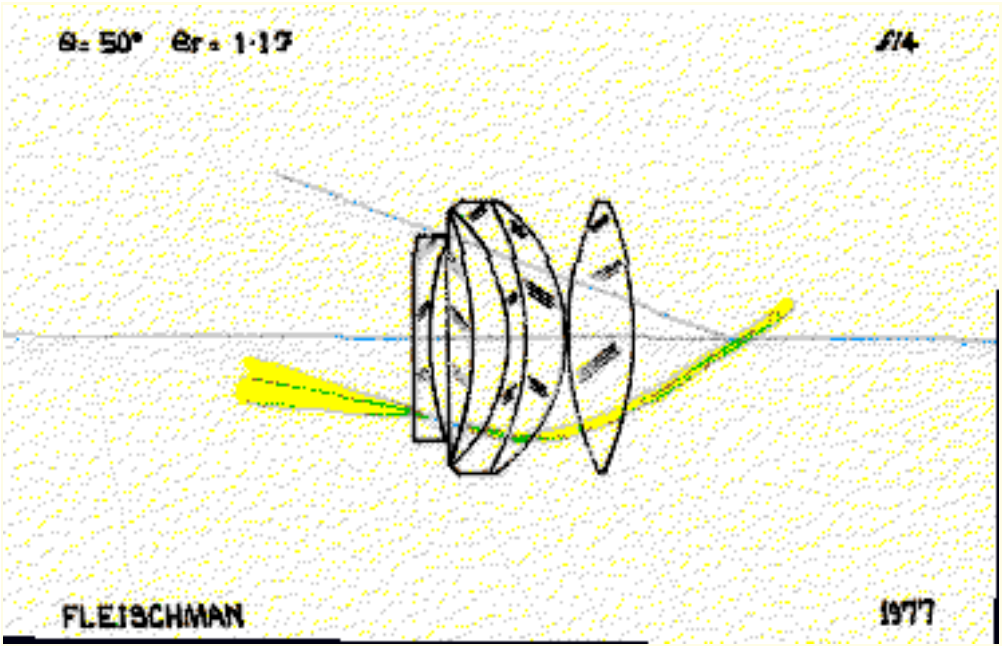

**NAGLER I -** A 2-1-2-2 design by Al Nagler, having a Smyth achromatic field flattener to widen the geometric apparent field from 52˚ to 82˚. However rectilinear distortion is 28%. Eye clearance is 1.2Fe. The Smyth lens enlarges the beam leading to a very bulky eyepiece in focal lengths greater than 13mm, and raised production costs. It also suffers markedly from spherical aberration of the exit pupil, more so than most other ultra-wide angle designs.

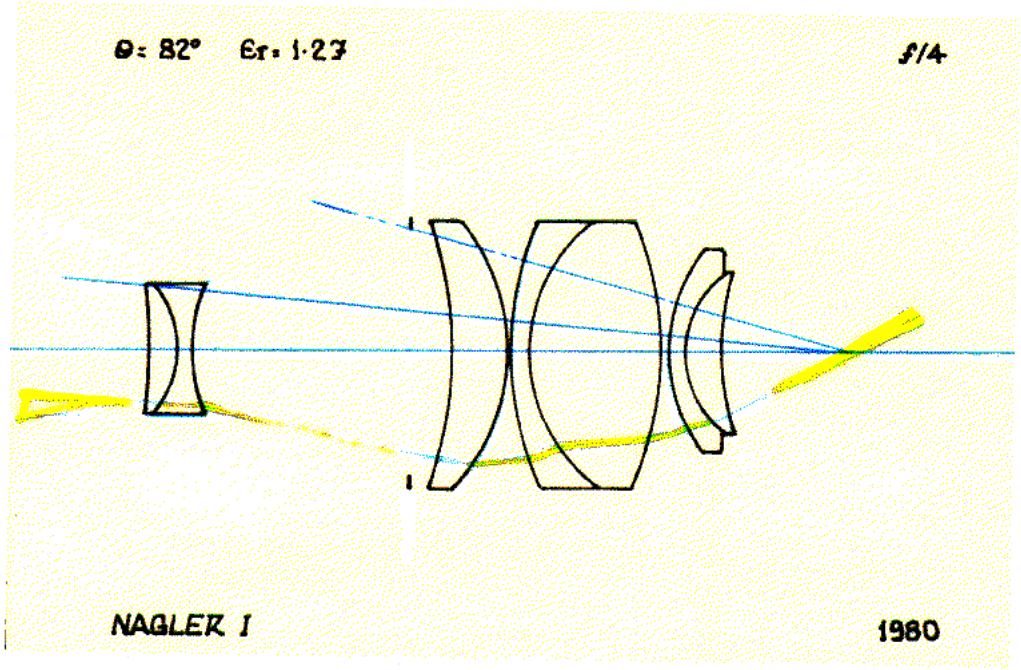


**NAGLER II -** A 2-1-2-1-2 modification by Al Nagler, sharing the same fundamental design and field, but having reduced spherical aberration of the exit pupil. It is still more noticeable than the military Bertele, and the Galoc.

**MEADE UWA -** A 2-1-2-1-2 design by Meade, having strong similarities to the Nagler II. The apparent field is 84˚ and eye clearance 1.5Fe.

The number of air-glass surfaces and lens thicknesses lead to significant transmission losses. Axial point images also tend to be larger than those formed by either the Orthoscopic or Monocentric.

**WHAT ARE THE BEST DESIGNS?**

Without doubt the best design types are the Monocentric, in its various forms, the Orthoscopic in its plethora of variants, the König in its various forms, the Bertele, the Galoc and Galoc II, and the modern Galoc-Bertele hybrid.

Choosing an eyepiece depends very much on the nature of the observing you intend using it for. Monocentrics are ideal for double star and planetary work where the restricted field is an advantage, as is the high image contrast. The Orthoscopic is a good all round design, useful for most types of observing, as is the König II. The Bertele and the Galoc lend themselves to low power, wide field work, and are to be recommended above the more recent ultra-wide angle negative-positive designs.

Where image contrast is an important consideration, as in the detection of low surface brightness, diffuse objects, or faint planetary detail, eyepieces with more than 6 air-glass surfaces are to be discouraged, particularly when used in conjunction with a coma corrector or focal reducer.

Also, where sketches of star fields are to be made, the use of ultra-wide angle designs which suffer from rectilinear distortion, should be avoided. For example, the geometric field of the Nagler II is only 59˚; rectilinear distortion introduced by the Smyth lens, enlarges the apparent field a further 30˚. The Galoc possesses an apparent field between 70˚ and 80˚, yet achieves it with only 4 air-glass surfaces and almost zero rectilinear distortion. Images of the Moon at medium to high power, seen in the presence of more than 20% rectilinear distortion cause the crater detail at the edge of the field to elongate, and as the image is moved, gives the appearance of peering through a gold fish bowl.

It should be born in mind that because eye relief is reduced at slow focal ratios, the apparent field applies ONLY at the design (usually critical) focal ratio, which in ultra-wide angle designs is typically f/4. At slower focal ratios, as the eye relief decreases, the apparent field expands. Whatever the design, off axis performance is always improved with slower focal ratio objectives, although some Barlow-eyepiece combinations do not work well, and some RFT apochromats compensate eyepiece Petzval curvature. In general the most effective combinations are objectives with focal ratios slower than f/10, and either Monocentric or Orthoscopic eyepieces. Employing a Barlow in conjunction with a fast primary is no substitute which is why long focus refractors and Cassegrain reflectors tend to have superior visual imagery.

Finally, image brightness in extended objects is a function of the exit pupil, not the objective focal ratio. Maximum image brightness occurs where the exit pupil matches the pupilliary aperture, and can never exceed the object's visual brightness with the unaided eye. When allowances are made for reflection and absorption losses in the objective and eyepiece, the image brightness of extended objects is always slightly less than its naked eye brightness. It is not therefore necessary, as is often mistakenly stated to be the case, to use a fast Newtonian in order to detect faint comets and galaxies. It is also not necessary to use highly corrected eyepieces with a slow focal ratio objective. Indeed, the off-axis images presented for example by the Bertele at f/16 are superior in every respect to those obtained at f/4 with a Nagler II.

## THE EVOLUTION OF EYEPIECE DESIGN

Having looked at the succession of eyepiece designs over the past four centuries, it is easy to recognize the evolution in thinking that lies behind each stage of development.

Huyghens' concept of a field lens to reduce the focal length of the objective and enlarge the apparent field of view, and at the same time correct lateral colour and minimize spherical aberration, set the stage and dictated all thinking upon the subject until 1977 and the first computer auto-optimized design.

Ramsden's concept placed a flat focal plane, corrected for rectilinear distortion, in an accessible position. For the first time micrometer threads could be seen clearly, and not marred by spherical aberration and false colour. Ramsden's concept has set the stage for all eyepiece designs intended for micrometers, comparators and sighting telescopes.

Kellner's achromatic eyepiece was essentially an achromatized Ramsden. Altering the plano-convex field lens to a bi-convex, and over-correcting the eye doublet to compensate, resulted in a wider apparent field than the Huyghenian, with greater eye relief.

Plössl's development of the Symmetrical, Dial-Sight and assymetric Plössl followed from his earlier designs of camera objectives and an improved achromatic and aplanatic doublet. Zeiss' Abbé duplet, with the later addition of an optional field lens, led naturally to the wide angle Erfles and their derivatives.

Abbé's Orthoscopic eyepiece was truly innovative, there being nothing to base it on. It is ironic that this design, in its best forms, remains the most useful astronomical eyepiece for general observation.

König's design was at first called the Kellner II, and it is obviously a variation of the Kellner. König worked with Bertele, and the König II and Bertele designs are conceptual extensions of König's initial work.

It is not difficult to recognize the design development of the Zeiss Astroplanokular. Post W.W.II astronomical eyepiece design experienced a marked down-turn due to military surplus saturating the market with Orthoscopic, Kellner, Symmetrical, Dial-Sight, and Erfle types at prices which undercut all commercial design and manufacturing costs. It was only when this surplus market dried up in the mid to late 1970's that commercial astronomical eyepiece design began to increase once more. Even so auctioned military eyepieces are still being offered, many of them Galoc wide angle designs, developed during the 1930's from the work of Erflé.

It is unfortunate that all the modern computer optimized ultra-wide angle designs, post Fleischman, share the same 8 to 10 air-glass surfaces, and adopt the negative-positive in many instances too, which introduces excessive rectilinear distortion.

The first true wide angle design was the Erflé, and to date, the only significant improvement has been the Galoc II and the Bertele-Galoc hybrid, which combine the better features of both the Erflé and the Orthoscopic. Greenwood has fabricated an excellent 1-2-1 wide angle design called the Panscopic, in which the collecting doublet is severely over-corrected and almost zero power. This empirical design is superior to the König, yielding a highly corrected 70° field. A similar 1-2-2 ultra-wide angle called the Platyscopic offers similar performance to the Galoc.

**THE EVOLUTION OF EYEPIECE DESIGN (Cont.):**

The development of the solid eyepiece, from Herschel's glass beads to the highly corrected Steinheil Monocentric has not until recently been pursued as far as it might. There exists on paper an aspheric variant of the Monocentric with a 40° field designed by R.A. Buchroeder. Greenwood has experimented with a shortened Tolles giving modest but workable eye clearance and a sharply defined 35° field, which is comparable at f/8 to the original Abbé Orthoscopic.

Given the ease of use and availability of PC ray tracing software, it is surprising there has not been an explosion of new designs. Now that it is feasible to generate aspherics or to mould aspheric optical plastic shells, there exists the possibility of modifying many existing designs in an attempt to obtain better correction, over wide fields, using fewer elements. Departure from spherical surfaces increases the degrees of freedom available to the designer.

The only promising developments in this field are due to Buchroeder and Clarke, with the Tuscon aspheric eyepiece, which is basically an achromatic Huyghenian married to a Smyth lens, having a flat highly corrected 42° field, and the Klee compensating eyepiece designed to correct the coma of an f/4 Newtonian over a 50° field.

Many of the Orthoscopic types manufactured currently are symmetrical triplets married to crown plano-convex lenses, using just two glass types. Their performance is decidedly inferior to the assymetric triplet, four glass types made by Steinheil and Zeiss, and Gailland between the late 20's and early 60's.

Similarly many of the so called Plössl types presently offered are not true Plössls but Symmetrical designs, again using just two glass types. Their performance cannot compare to the true assymetric Zeiss (later Clavé) Plössl. This simplification is done in the name of reducing manufacturing costs. It is a pity this is not also reflected in the price; a Plössl name tag attracting a hefty premium in some quarters.

It is unfortunate that currently available commercial eyepieces are mainly over-priced versions of Plössl designs, and carry on unwarranted reputation that makes them little more than fashion accessories. Twenty years ago, the best quality Monocentric and Orthoscopic eyepieces cost about £5. Allowing for inflation, that figure would now be about £40. And yet one will have to look very hard for even the most humble Kellner or achromatic Huyghenian in the £40 - £50 price range. The ONLY U.K. manufactured eyepieces that have an astronomical application are those military surplus auctioned at very low prices by the M.o.D. The author, over the past 5 years, has obtained some excellent low and medium power wide angle eyepieces from dealers in such equipment. You may expect to part with between £40 and £60.

## SELECTING EYEPIECES

Astronomical eyepieces come in a variety of standardized fittings. Older types usually have a 1.25 inch-16TPI WHITWORTH (RAS) thread. Cooke, Grubb and Ross had their own intentionally incompatible push fit barrels. In the case of Cooke it was 1".208.

American and U.K. eyepieces have either 1".25 or 2" push fittings. Japanese eyepieces used to have a 24.5mm (Swift) push fit, but now are also available in American fittings. Russian eyepieces have either a 29mm or 32mm push fitting and French a 27mm (1 Paris inch - actually 27.07mm) push fitting.

Ex W.W.II surplus and M.o.D. eyepieces come in all manner of sizes and always need adapting. This is best carried out by a competent instrument maker, than by Heath Robinson.

When selecting eyepieces regard must be made to the focal ratio of the objective, because this dictates the design types and the useable focal length range, that will perform satisfactorily. It is also quite inappropriate for example. equipping an f/10 Schmidt-Cassegrain with an f/6.3 focal reducer, or an f/4 Dobsonian light bucket with a coma corrector, and then using an 8 element ultra-wide angle eyepiece. Unless that is, it is your purpose to loose as much light as possible and drive image quality already perilously close to the diffraction limit, well below it.

The frequently overlooked advantage of using modern military eyepieces is that their optical quality and aberration correction is to a standard that would be commercially uneconomic. Their polish is also to a much higher standard. Surface finish (see appendix) is stated using a "scratch/dig ratio". The minimum standard, passable in commercial optics, is a ratio of 80/50 or 60/40. Military requirements in laser rangefinders and target acquisition optics are much higher, being between 20/10 and 40/20, which means military optics scatter less light and produce better image contrast as a consequence. However these types tend not to work well with Barlow lenses. For high powers the best value for money are the Orthoscopic, RKE and König II. Sadly the best high power eyepiece of all, the Steinheil Monocentric is no longer made.

Ultra-wide angle eyepieces and lanthanum and ED glass eyepieces illustrate the law of diminishing returns. Their marginally improved performance is accompanied by a disproportionately high price. They represent poor value. Rather it makes sound economical sense to adapt your telescope to 2" push fit, by replacing the focusing mount if necessary, and employing adapted military eyepieces for low powers where a wide real field is desired, and having 1".25 and 24.5mm adaptors to permit the use of budget priced Orthoscopic and König II medium and high power eyepieces.

Parfocal eyepieces possess a common focal point, and eyepiece powers may be changed without loosing the focus, although some slight refocusing is always necessary. This is a useful feature where a turret is used.

A binocular head enables the observer to use both eyes, which reduces eye strain, and enhances the perceived image. Eyepieces do not need to have matched focal lengths. Provided they differ by not more than 5%, the images will fuse, although those who habitually observe with one eye will experience dominance problems and it may take a few days practice before the images fuse readily.

Most modern 1".25 push fit eyepieces have internally threaded barrels to accept "standardized" coloured filters. Unfortunately there is no accepted standard thread and you must check whether a certain eyepiece filter is in fact compatible with your eyepiece.

**TESTING EYEPIECES**

Much has been written about star testing astronomical objectives. In the past century there have been two seminal texts on the subject, yet little has been written about star testing eyepieces. Some vital properties of an eyepiece can however be checked in daylight, without any telescope at all. Hold the eyepiece to your eye where you can see the outline of the field stop. The proximity with which you must place your eye behind the eye lens tells you immediately how much (or little) eye relief there is.

I) Is the edge of the field stop sharply defined?

If it is not then it is either misplaced from the focal plane, or there is residual spherical aberration (grounds for rejection).

ii) Is the edge of the field stop tinged with false colour?

Most eye pieces are slightly overcorrected, which leads to a greenish-yellow, or bluish colouration to the edge of the field stop. If the colour is reddish the eyepiece is undercorrected and will not work well with a fast objective.

iii) Is the field of view evenly illuminated?

If it is not, and you need to move the eyepiece away from your eye to produce an even illumination in the field centre, and closer to see the field stop, then the eyepiece suffers from spherical aberration of the exit pupil. This is not actually classified as an optical aberration because it does not lead to any deterioration in image sharpness. In practice this may not be too objectionable, but if the exit pupil matches that of the eye pupil it will be, and when it is bigger than the eye pupil, as when observing the full moon at low power, it becomes a confounded irritation.

iv) Is the entire field visible from the eyepoint?

Some wide angle eyepieces have an apparent field too wide for the eye to accept without some eye movement. If you need to look obliquely across the eye lens to see the field stop then the eyepiece suffers profoundly from either rectilinear distortion or angular magnification distortion. (Grounds for rejection).

v) Is the dark edge of the apparent field milky?

If so then light is being scattered off the air-glass surfaces; the lens edges and, or, the inside of the eyepiece barrel. Scattering drastically reduces image contrast. (Grounds for rejection).

So, you can tell most of the basic properties of any eyepiece BEFORE you take it out of the shop! Assuming it passes all these daylight tests, what do you look for when it is used on your telescope?

A star test can reveal the following properties:

vi) ghosting
vii) lateral colour
viii) astigmatism & coma
ix) field curvature
x) distortion
xi) contrast and transmission

vi) Is there any ghosting?

If so, how bright is it and does it follow the image, mirror it, or remain near the axis? Is it coloured? Kellner, Symmetrical and Plössl eye pieces all produce ghost images, that are suppressed by effective blackening of the barrel interior, lens edges, and field stop. Anti-reflection coatings on all air-glass surfaces also reduce ghosting. They cannot however be completely eliminated.

**TESTING EYEPIECES (cont.):**

Is it in focus or diffuse? How objectionable ghosting is depends to a large extent on the type of observing you do. An eyepiece that produces bright on axis ghosts that either follow or mirror the image would not be a nuisance if you are observing M32 say, but would be when observing M13. Likewise a diffuse off axis ghost that follows the image might cause confusion when comet hunting.

vii) Lateral colour is easy to detect, and almost all eyepieces exhibit it, some more so than others. It is also more obvious with fast objectives. As the star image is displaced towards the edge of the field, it becomes drawn out into a short spectra, red towards the centre when undercorrected, blue when overcorrected. The eye is remarkably tolerant of this malady, especially when using wide angle eyepieces, where it is worst, because, when the eye is fixated on axis, the off axis image towards the edge of field falls on the portion of the retina which is capable of only giving black and white images! Also faint stars exhibit no sensible colour in any case, masking the aberration somewhat.

viii) Astigmatism, due mainly to the eyepiece, and coma, due mainly to the objective of a reflector, are never seen in isolation. Any star, when displaced towards the edge of field will become either elongated or triangular or fan shaped, apex innermost. When the eye is fixated on axis, astigmatism and coma need to be very marked for the eye to resolve it. It is only when the eye is fixated towards the field boundary that these aberrations become obvious. However no eyepiece is completely free of it. The wider the apparent field and the faster the objective, the worse it becomes.

ix) Field curvature can easily be tested too. Focus the star on axis and displace it to the field edge. Does the image defocus? If you need to rack the eyepiece towards the objective then the focal surface is convex towards the eye and vice versa. The eye is remarkably tolerant of field curvature, especially in the young, because you unconsciously accommodate as you shift your direction of fixation. As the range in visual accommodation diminishes with advancing old age field curvature becomes a problem. And the wider the apparent field and the faster the objective, the bigger the problem becomes.

x) Distortion is difficult to detect visually except when the coefficient exceeds 20%, and only then on bright extended objects containing rectilinear or regularly spaced features.

xi) Contrast and transmission, go hand in glove. Image contrast may be tested by comparing the appearance of the outermost visible diffraction rings to the Airy disc, or the faintest visible detail on a planet. Transmission may be tested by seeing how difficult it is to detect the faint companions of very bright stars, e.g. Vega or Rigel or Regulus. The darkness of the field background is also an important indicator. Contrast and transmission are the most important properties of any eyepiece, being crucial to good definition.

**TESTING EYEPIECES (cont):**

Lastly there are some physical properties of eyepieces that can be cause for concern. Eyepieces with flint elements outermost, even when magnesium fluoride coated, are vulnerable to scratches because both the leaded glass and the coating are relatively soft. If the field stop is close to the first surface of the field lens almost any defect will be silhouetted in the field. Defects on the eye lens are only a real nuisance when near the centre. If the last surface is either flat or slightly concave, check that the reflection of either your iris or eye lashes do not intrude into the image. Rubber eye cups can reduce this problem and also assist holding your pupil at the eye point.

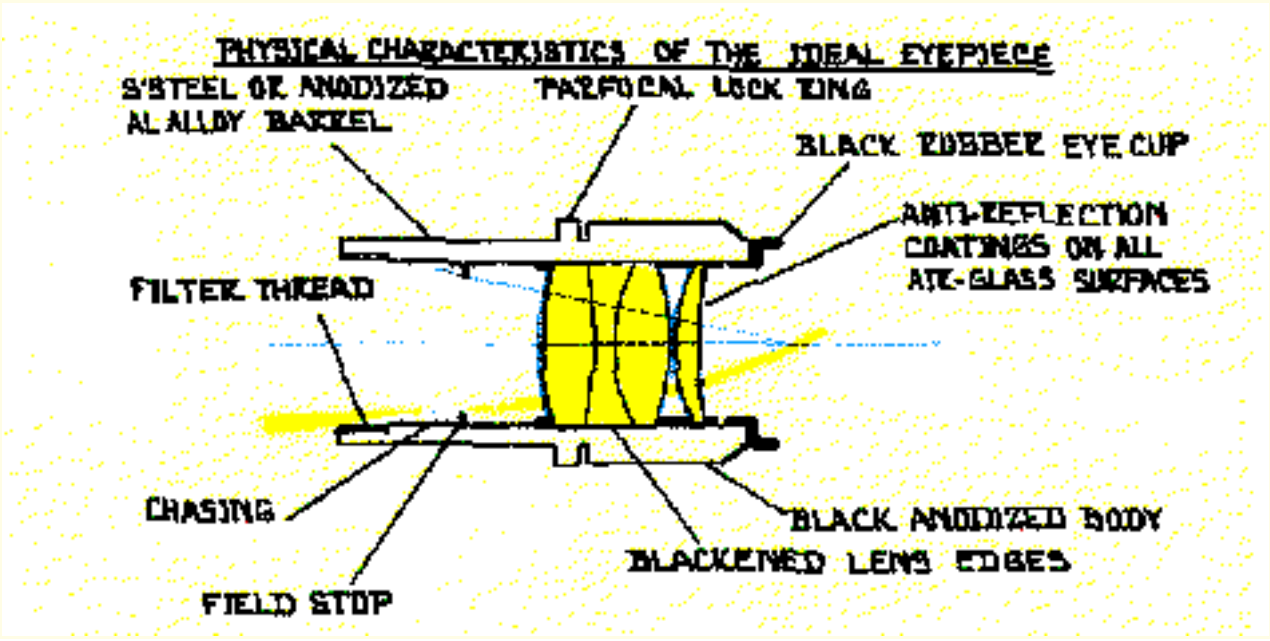


**CARE & MAINTENANCE of EYEPIECES**

Never dismantle the lens assembly from the barrel. Once dust gets within it is impossible to eliminate. Occasionally you will have to remove dust from the first and last surfaces. Use either a camel hair brush, a blower brush or compressed air. Suitable cleaning fluids for degreasing are Isopropynol, A0 Solution 30 (Alpha Lens Solution) or Sparkelbright. Use a whole chamois cloth to remove, and ensure there is no dust or grit on the surface beforehand.

Flint glass, fluorite, and lithium or magnesium fluoride coatings are prone to polishing sleeks, which scatter light and reduce contrast.

The best way to avoid having to continually clean the field and eye lens is to keep the eyepiece capped at both ends when not in use. If it becomes dewed, remove with a hair dryer, or allow to demist in a warm room before recapping.

When not in use store your eyepieces in a sealed case containing a bag of silica gel or clay desiccant. It is important to keep lenses dry because there are contaminants and resins floating in the atmosphere that can attack leaded glasses like crown and flint. The lead is dissolved into the glass to give it the refractive and dispersive properties the optical designer needs, and to make the glass lucid. Lead can come out of solution, especially in heavy flints, and this produces in older eyepieces a surface mottling. If the lens is left in a

**CARE & MAINTENANCE of EYEPIECES (Cont.):**

damp environment for any length of time, lead sulphide can form on the surface which is almost impossible to remove. Certain barium crown glasses used in some wide angle military eyepieces will devitrify, making the lens milky. Also if dropped, or subjected to a violent temperature change, cemented lenses can separate, resulting in Newton's rings appearing. A cemented element eyepiece should not be used for solar projection, and the field stop must be bigger than the prime focal image, or the barrel will overheat.

**THE EYEPIECE & THE EYE**

The eye is chromatically undercorrected by approximately 0.25 dioptres at both red and violet wavelengths, and in general, spherically undercorrected for pupilliary apertures less than 3mm. However, spherical correction at wider eye pupils ranges from several dioptres undercorrection to several dioptres overcorrection.

The eye performs better when its inherent achromatism is compensated by a chromatic overcorrection of the eyepiece-objective combination. Such compensation, termed hypochromatism, is commonly featured in the design of high quality binoculars and spotting telescopes.

When the blur size of an object is less than 1' arc the eye interprets the image as a point. This aberration tolerance increases to more than 5' arc off axis, and hence the extra-axial aberrations at the edge of a wide angle eyepiece are much less critical than those on axis.

When the brilliance of the image causes the pupil to contract to its smallest size (about 1.5mm), effectively the system focal ratio is reduced to:

$$ef/no. = Fe/Ep$$

For example, when observing the Full Moon at low power with a 45mm eyepiece, the relative aperture will be reduced to approximately f/30, at which almost any eyepiece type will perform well.

Correction is needed in the presence of astigmatism, especially when the exit pupil and the eye pupil both exceed 3mm. Special stigmatic lenses can be fitted to eyepieces with the required cylinder compensation. Alternatively where the eye point distance permits, spectacles may be worn, though unless astigmatism is severe (exceeds 2 dioptres), it is better to observe without them. It is not necessary to wear reading or distance spectacles intended to compensate myopia, hypermetropia or presbyopia because all these sight deficiencies can be corrected by refocusing.

In general, spectacles interfere with the observer's access to the eye point and restrict the apparent field. Also reflections off the lens can reduce image contrast and prove very distracting. In any case visual astigmatism will not reduce image sharpness or contrast when less than 2 dioptres. At high powers where the exit pupil is less than 1mm, even severe visual astigmatism has a negligible effect on the image.

In the author's estimation a lot of nonsense has been written about the pros and cons of spectacle wearers keeping their spectacles on when observing. The most common reason for failing to see what a more experienced observer sees is lack of training, not acuity. It is sadly a truism, that some are much more adept than others at acquiring the skills of a good observer, and no amount of fiddling around with eyepieces and filters is going to alter that one iota.

Astronomical eyepieces invert the image. The diagram depicts the light path of a bundle of off-axis rays imaged by a low power eyepiece, drawn to scale. The eye is placed at the eyepoint where the exit pupil crosses the objective optical axis. This point coincides with the intersection of the geometric field boundary and the first principal point of the unaccommodated

When spectacles are worn the correction lens is located near the anterior focus about 15.5 mm in front of the cornea. Unless the eyepoint distance is greater than 17mm (the anterior focal length), the extra-axial rays will be vignetted by the iris and the field stop will not be accessible. Unless the observer's eye is affected by severe astigmatism (greater than 2 dioptres) it is best to observe without

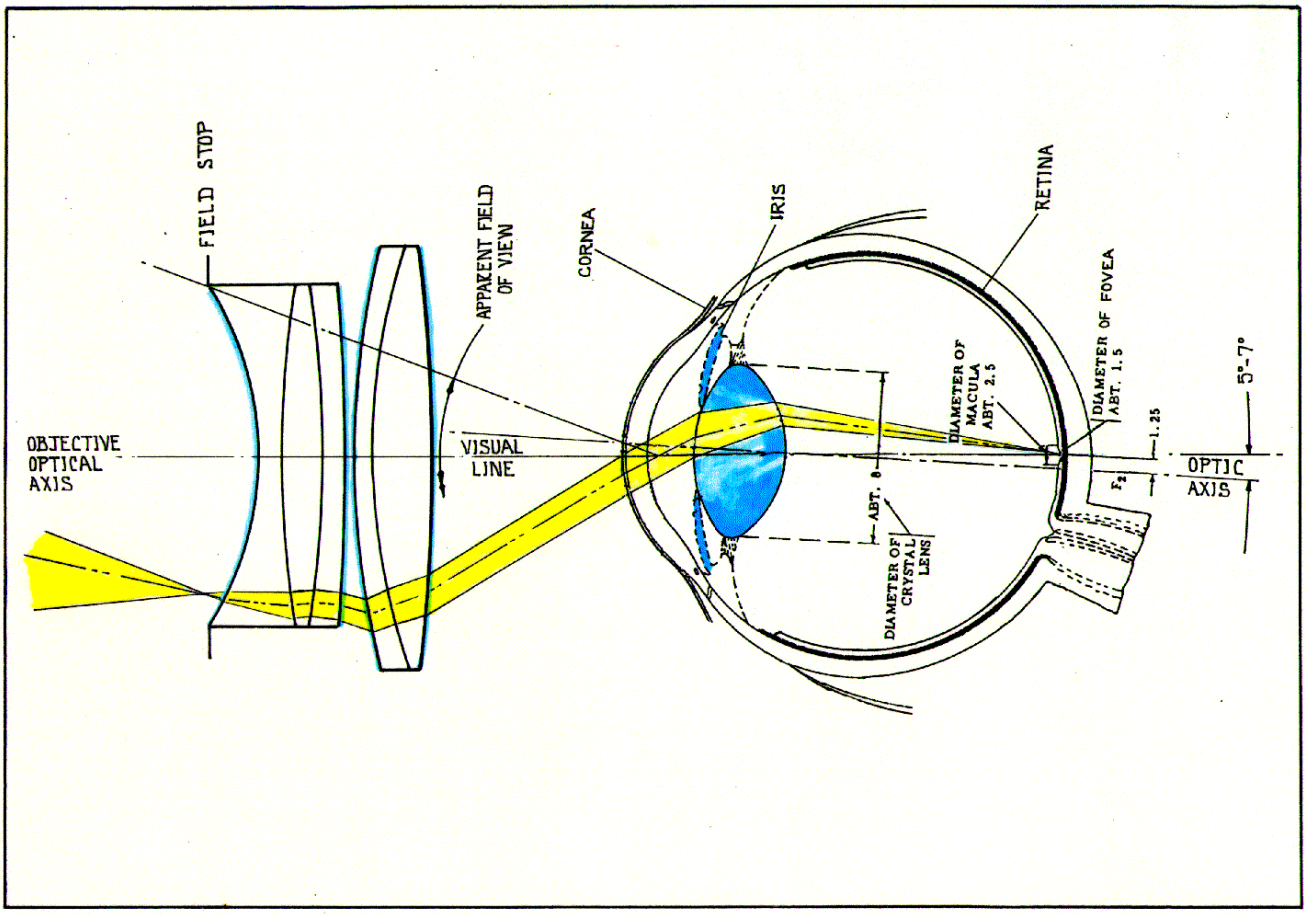


lens and focused onto the fovea, which lies between 5° & 7° off axis. The observer is not conscious that the part of the field under examination always falls on the fovea. This portion of the retina, responsible for the most detailed colour vision is only about 1.5mm across and is located about 1.25mm towards the temporal side. Resolution at the fovea is about 1'arc. Immediately beyond the fovea resolution rapidly falls to about 5'arc, retinal sensitivity increases but there is no colour perception. The observer automatically fixates the part of the image of interest on the fovea, and must consciously avert the direction of fixation when examining faint objects.

defocusing the eyepiece, in which case the ray bundle which is normally parallel, either diverges or converges onto the cornea in precisely the same way it would after being refocused by the spectacle lens.

The eyepiece depicted is a Bertele-Galoc hybrid with a 60° apparent field commonly used in modern high quality binoculars and spotting 'scopes.

**appendix**

**APPARENT LUMINANCE of TELESCOPIC IMAGE**

The apparent luminance of the telescopic image of an extended object is dependent upon the aperture, exit pupil and transmission factor. Of course it is assumed the exit pupil is not larger than the eye pupil, otherwise the latter effectively stops down the entrance pupil.

There is however another factor usually overlooked that must be taken into consideration, and that is the directional property of the retinal receptors (rods & cones), termed the Stiles-Crawford factor. Ray bundles entering the eye along the visual line are more effective in producing a visual stimulus than those entering obliquely at the edge of the pupil.

Hence:-

$$\frac{Apparent\ luminance\ of\ image}{Apparent\ luminance\ of\ object} : \frac{Li}{Lo} = k.\frac{D^2.So\S}{Ep_e^2.M^2.Se}$$

where So - Stiles Crawford efficiency factor at exit pupil radius
Se - Stiles Crawford efficiency factor at eye pupil radius
Epe- Eye pupil diameter
Epo- Exit pupil diameter
k - Transmission efficiency factor

the limits of the exit pupil are: 0.5mm < Epo < 8mm
the limits of the exit pupil are: 1.5mm < Epe < 8mm

& when Epo > Epe ; then Epo / Epe = 1

$$\therefore when\ Ep_e < Ep_o;\quad \frac{Li}{Lo} = k.\frac{Ep_o^2}{Ep_e^2}.\frac{So}{Se}$$

$$\&when\ Ep_e \geq Ep_o;\quad \frac{Li}{Lo} = k..\frac{So}{Se}$$

This of course also assumes the eye pupil remains the same diameter when the object is viewed l'oeil nu, and through the telescope. This is not always so, in which case:

$$when\ Ep_e < Ep_o;\quad \frac{Li}{Lo} = k.\frac{Ep_o^2}{Ep_e^2}.\frac{So}{Se'}$$

$$\&when\ Epe \geq Epo;\quad \frac{Li}{Lo} = k.\frac{So}{Se'}$$

where Se' - Stiles Crawford efficiency factor at the naked eye pupil radius

The STILES CRAWFORD efficiency factor is given by:

$$S = \frac{1 - e^{-0.105\left(\frac{Ep}{2}\right)^2}}{0.105\left(\frac{Ep}{2}\right)^2}$$

**appendix**

**APPARENT LUMINANCE of TELESCOPIC IMAGE**

The chart below illustrates the relationship between the exit pupil, eye pupil and the luminance ratio. It should be noted that no circumstance can occur in which the ratio exceeds 1.0k, hence the luminance of the telescopic image is always less than the naked eye image.

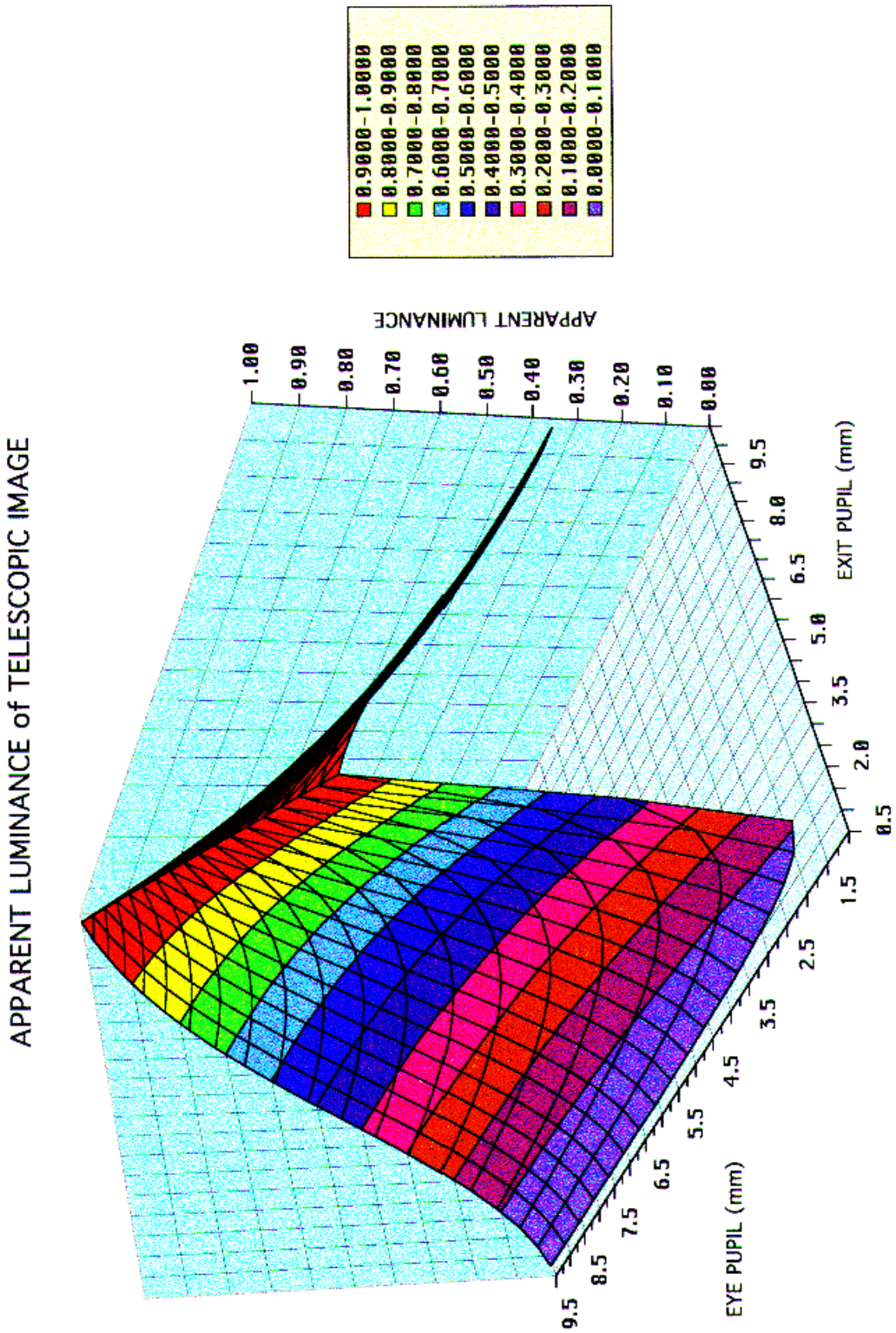

**appendix**

**APPARENT LUMINANCE of TELESCOPIC IMAGE (cont.):**

The chart below illustrates the relationship between the exit pupil, eye pupil and the luminance ratio. It should be noted that no circumstance can occur in which the ratio exceeds 1.0k, hence the luminance of the telescopic image is always less than the naked eye image.

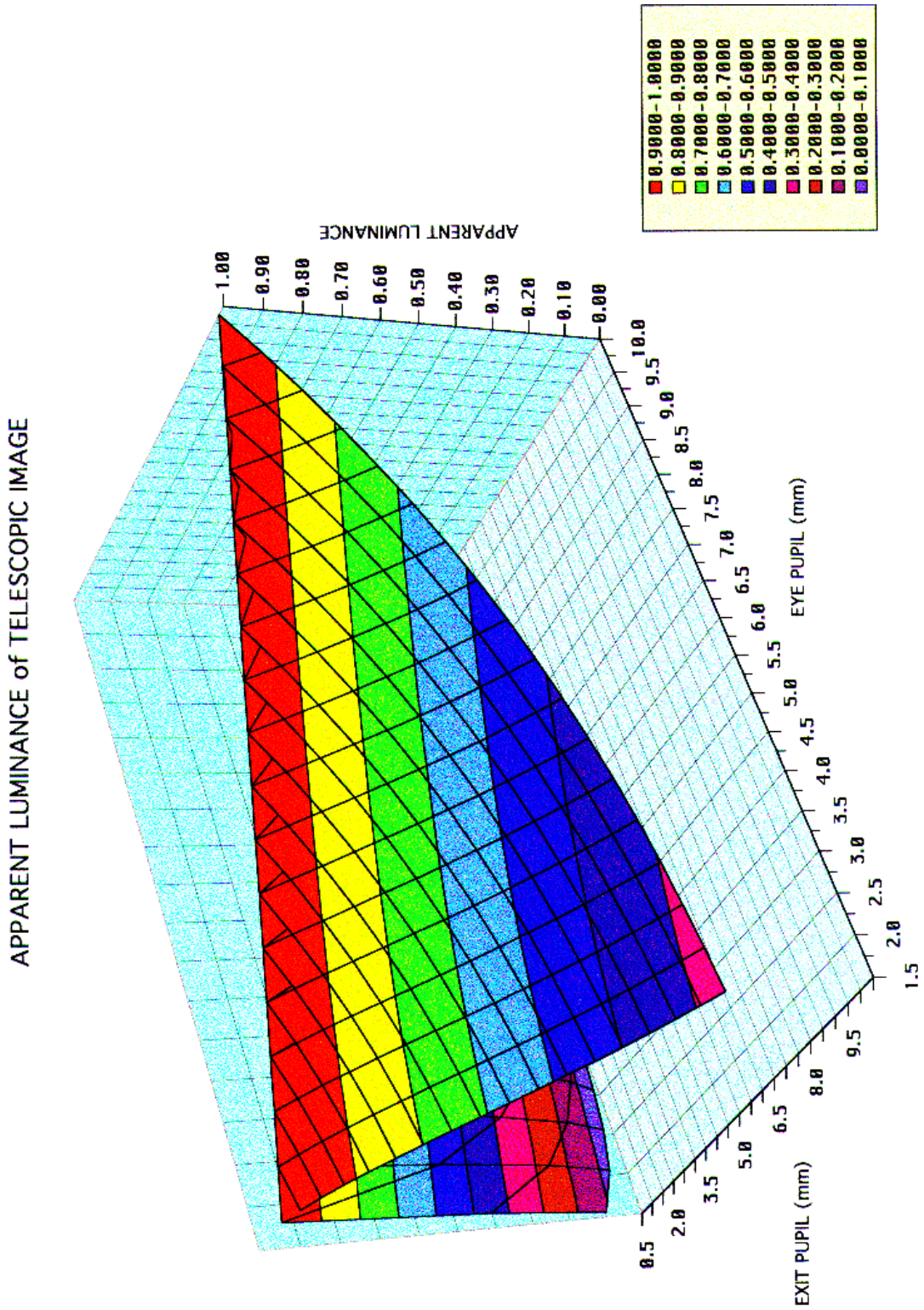

**appendix**

## APPARENT LUMINANCE of TELESCOPIC IMAGE

The table below enumerates the relationship between the exit pupil, eye pupil and the luminance ratio. It should be noted that no circumstance can occur in which the ratio exceeds 1.0k, hence the luminance of the telescopic image is always less than the naked eye image.

| | APPARENT LUMINANCE OF TELESCOPIC IMAGE | | | | | | | | |
|---|---|---|---|---|---|---|---|---|---|
| Exit Pupil(mm) | | Pupilliary aperture mm | | | | Pupilliary aperture mm | | | |
| | 1.5 | 2.0 | 2.5 | 3.0 | 3.5 | 4.0 | 4.5 | 5.0 | 5.5 |
| 0.5 | 0.1141 | 0.0656 | 0.0432 | 0.0311 | 0.0238 | 0.0191 | 0.0159 | 0.0136 | 0.0119 |
| 1.0 | 0.4517 | 0.2599 | 0.1712 | 0.1231 | 0.0942 | 0.0755 | 0.0628 | 0.0538 | 0.0473 |
| 1.5 | 1.0000 | 0.5754 | 0.3790 | 0.2726 | 0.2086 | 0.1672 | 0.1391 | 0.1192 | 0.1047 |
| 2.0 | 0.9776 | 1.0000 | 0.6587 | 0.4737 | 0.3625 | 0.2906 | 0.2417 | 0.2071 | 0.1819 |
| 2.5 | 0.9498 | 0.9715 | 1.0000 | 0.7191 | 0.5503 | 0.4412 | 0.3670 | 0.3144 | 0.2761 |
| 3.0 | 0.9172 | 0.9382 | 0.9657 | 1.0000 | 0.7652 | 0.6135 | 0.5103 | 0.4373 | 0.3840 |
| 3.5 | 0.8807 | 0.9008 | 0.9272 | 0.9601 | 1.0000 | 0.8018 | 0.6669 | 0.5714 | 0.5018 |
| 4.0 | 0.8409 | 0.8602 | 0.8854 | 0.9168 | 0.9549 | 1.0000 | 0.8318 | 0.7127 | 0.6258 |
| 4.5 | 0.7988 | 0.8171 | 0.8410 | 0.8709 | 0.9070 | 0.9499 | 1.0000 | 0.8568 | 0.7524 |
| 5.0 | 0.7551 | 0.7724 | 0.7951 | 0.8233 | 0.8575 | 0.8980 | 0.9453 | 1.0000 | 0.8781 |
| 5.5 | 0.7107 | 0.7270 | 0.7483 | 0.7748 | 0.8070 | 0.8452 | 0.8897 | 0.9412 | 1.0000 |
| 6.0 | 0.6662 | 0.6815 | 0.7014 | 0.7263 | 0.7565 | 0.7922 | 0.8340 | 0.8822 | 0.9374 |
| 6.5 | 0.6223 | 0.6365 | 0.6552 | 0.6784 | 0.7066 | 0.7400 | 0.7790 | 0.8240 | 0.8756 |
| 7.0 | 0.5794 | 0.5927 | 0.6101 | 0.6317 | 0.6579 | 0.6890 | 0.7254 | 0.7673 | 0.8153 |
| 7.5 | 0.5381 | 0.5505 | 0.5666 | 0.5867 | 0.6111 | 0.6399 | 0.6737 | 0.7126 | 0.7572 |
| 8.0 | 0.4987 | 0.5102 | 0.5251 | 0.5438 | 0.5663 | 0.5931 | 0.6244 | 0.6605 | 0.7018 |
| 8.5 | 0.4615 | 0.4721 | 0.4859 | 0.5032 | 0.5240 | 0.5488 | 0.5777 | 0.6111 | 0.6494 |
| 9.0 | 0.4266 | 0.4363 | 0.4491 | 0.4651 | 0.4844 | 0.5073 | 0.5340 | 0.5649 | 0.6002 |
| 9.5 | 0.3940 | 0.4031 | 0.4149 | 0.4296 | 0.4474 | 0.4686 | 0.4933 | 0.5218 | 0.5544 |
| 10.0 | 0.3639 | 0.3722 | 0.3831 | 0.3967 | 0.4132 | 0.4327 | 0.4556 | 0.4819 | 0.5120 |

| | APPARENT LUMINANCE OF TELESCOPIC IMAGE | | | | | | | | |
|---|---|---|---|---|---|---|---|---|---|
| Exit Pupil(mm) | | Pupilliary aperture mm | | | | Pupilliary aperture mm | | | |
| | 6.0 | 6.5 | 7.0 | 7.5 | 8.0 | 8.5 | 9.0 | 9.5 | 10.0 |
| 0.5 | 0.0107 | 0.0098 | 0.0090 | 0.0085 | 0.0080 | 0.0077 | 0.0074 | 0.0072 | 0.0071 |
| 1.0 | 0.0424 | 0.0387 | 0.0358 | 0.0336 | 0.0318 | 0.0305 | 0.0294 | 0.0286 | 0.0279 |
| 1.5 | 0.0938 | 0.0856 | 0.0792 | 0.0743 | 0.0705 | 0.0675 | 0.0651 | 0.0633 | 0.0618 |
| 2.0 | 0.1630 | 0.1487 | 0.1377 | 0.1292 | 0.1225 | 0.1173 | 0.1132 | 0.1100 | 0.1075 |
| 2.5 | 0.2475 | 0.2258 | 0.2091 | 0.1961 | 0.1860 | 0.1780 | 0.1718 | 0.1669 | 0.1631 |
| 3.0 | 0.3442 | 0.3140 | 0.2908 | 0.2727 | 0.2586 | 0.2476 | 0.2389 | 0.2321 | 0.2268 |
| 3.5 | 0.4498 | 0.4103 | 0.3800 | 0.3564 | 0.3380 | 0.3235 | 0.3122 | 0.3034 | 0.2965 |
| 4.0 | 0.5610 | 0.5118 | 0.4739 | 0.4445 | 0.4215 | 0.4035 | 0.3894 | 0.3784 | 0.3697 |
| 4.5 | 0.6745 | 0.6153 | 0.5697 | 0.5344 | 0.5068 | 0.4851 | 0.4682 | 0.4549 | 0.4445 |
| 5.0 | 0.7872 | 0.7181 | 0.6649 | 0.6237 | 0.5914 | 0.5662 | 0.5464 | 0.5309 | 0.5188 |
| 5.5 | 0.8964 | 0.8177 | 0.7572 | 0.7102 | 0.6735 | 0.6448 | 0.6222 | 0.6046 | 0.5908 |
| 6.0 | 1.0000 | 0.9122 | 0.8447 | 0.7923 | 0.7514 | 0.7193 | 0.6941 | 0.6744 | 0.6591 |
| 6.5 | 0.9340 | 1.0000 | 0.9260 | 0.8685 | 0.8236 | 0.7885 | 0.7609 | 0.7393 | 0.7225 |
| 7.0 | 0.8697 | 0.9312 | 1.0000 | 0.9379 | 0.8895 | 0.8515 | 0.8217 | 0.7984 | 0.7802 |
| 7.5 | 0.8078 | 0.8648 | 0.9287 | 1.0000 | 0.9483 | 0.9078 | 0.8761 | 0.8512 | 0.8318 |
| 8.0 | 0.7486 | 0.8015 | 0.8608 | 0.9268 | 1.0000 | 0.9573 | 0.9238 | 0.8976 | 0.8772 |
| 8.5 | 0.6927 | 0.7417 | 0.7965 | 0.8576 | 0.9253 | 1.0000 | 0.9650 | 0.9377 | 0.9163 |
| 9.0 | 0.6403 | 0.6855 | 0.7362 | 0.7927 | 0.8553 | 0.9243 | 1.0000 | 0.9716 | 0.9495 |
| 9.5 | 0.5915 | 0.6332 | 0.6800 | 0.7322 | 0.7900 | 0.8538 | 0.9237 | 1.0000 | 0.9772 |
| 10.0 | 0.5462 | 0.5848 | 0.6280 | 0.6762 | 0.7296 | 0.7885 | 0.8531 | 0.9235 | 1.0000 |

## SURFACE QUALITY OF OPTICAL ELEMENTS

Surface Quality refers to the cosmetic features of an optical element in terms of the amount of defects that can be visually inspected on the element's surface. A scratch is any mark or tear on the surface and a dig is any pit or divot in the surface. The Scratch-Dig specification defines the quality of a polished surface.

Scratches and Digs are defined by the U.S. Mil.SPEC. MIL-0-13810A. Scratch numbers are essentially defined by the width of a scratch in 1/10,000mm (0.1µm). However the lengths of scratches and combinations of smaller scratches also contribute to the scratch number. Dig numbers are defined by the actual diameter of a dig in 1/100mm (10µm). Smaller digs and irregularly shaped digs also affect the dig number. Specification of optical surface quality is denoted by the scratch number followed by the dig number. For example a scratch-dig ratio of 60-40 is acceptable in commercial eyepiece optics.

Typical scratch-dig ratios, from the highest quality essential for scatter free lenses, through to the minimum acceptable quality suitable in emitter-detector optics are:

| | | | | | | | |
|---|---|---|---|---|---|---|---|
| **SCRATCH No.:** | **10;** | **20;** | **40;** | **60;** | **80;** | **120;** | **160.** |
| **DIG No.:** | **05;** | **10;** | **20;** | **40;** | **50;** | **70;** | **100.** |

the higher the scratch and dig numbers the lower the surface quality.

**BIBLIOGRAPHY**

LABORATORY INSTRUMENTS THEIR DESIGN & APPLICATION - A. ELLIOTT Ph.D., D.Sc., & J.HOME DICKSON M.Sc., - 1959 (LENSES, MIRRORS AND PRISMS) p290-295; CHAPMAN & HALL

THE INVERTING EYEPIECE AND ITS EVOLUTION - WILFRED E. TAYLOR F.R.A.S., F.R.M.S., F.Inst.P. JOURNAL SCIENTIFIC INSTRUMENTS - 1945 Vol.22, No.3 pp43-48.

TELESCOPE EYEPIECES - HORACE H. SELBY - AMATEUR TELESCOPE MAKING 1996 Vol.3, Ch.B3, pp145-176. - WILLMANN BELL

LENS WORK FOR AMATEURS - HENRY ORFORD 5th. Ed. 1931 pp39-45; pp97-110; pp125-132; pp145-158; pp180-183 - PITMAN & SONS

EYEPIECES OF INTEREST TO AMATEURS - GLEANINGS FOR ATM's - ROBERT E. COX SKY & TELESCOPE 1961 Nov. p294-296.

A HISTORY OF THE PHOTOGRAPHIC LENS - RUDOLPH KINGSLAKE - 1989 - ACADEMIC PRESS

TELESCOPE OPTICS EVALUATION AND DESIGN - RUTTEN & van VENROOIJ - 1988 - EYEPIECES FOR TELESCOPES Ch.16, pp157-191 - WILLMANN BELL

AMATEUR ASTRONOMER'S HANDBOOK - J.B. SIDGWICK F.R.A.S. - 1955 - FABER AND FABER
SECTION 3 - TELESCOPIC FUNCTION: MAGNIFICATION AND FIELD SIZE - pp52-64
SECTION 4 - ABERRATIONS - pp65-96
SECTION 6 - OPTICAL MATERIALS - pp104-113
SECTION 8 - OCULARS - pp132-152

MIRRORS, PRISMS AND LENSES - A TEXT-BOOK OF GEOMETRICAL OPTICS - J.P.C. SOUTHALL - 1933 - MACMILLAN

GHOSTS AND OCULARS - LEWIS BELL - PROCEEDINGS OF THE AMERICAN ACADAMY OF ARTS AND SCIENCE - Vol.56, No.2 p45.

STAR WARE - PHILIP S. HARRINGTON - 1994 Ch.5 pp105-125 - JOHN WILEY

COMPENDIUM OF PRACTICAL ASTRONOMY VOL.1 - GÙNTER DIETMAR ROTH (Ed.) - 1994 - OPTICAL TELESCOPES AND INSTRUMENTATION
Ch.4, pp59-136 - (Ref: Fig.4.10,p78 for characteristics of Schott glass)
SPRINGER-VERLAG

A HANDBOOK OF DESCRIPTIVE AND PRACTICAL ASTRONOMY - GEORGE F. CHAMBERS, F.R.A.S. - 1890 4th.Ed.,
Vol.II, BOOKVII - THE TELESCOPE AND ITS ACCESSORIES - Ch.1, pp1-47
OXFORD UNIVERSITY PRESS

## EYEPIECE EVOLUTION - 1610 to 1990+

### eyepiece types in order of origin

| No. | NAME | DATE OF ORIGIN | APPARENT FIELD | EYE RELIEF | CRITICAL f/no | COMMENTS |
|---|---|---|---|---|---|---|
| 1 | KEPLER | 1610 | 10˚ | 0.9 | 35 | Equi-convex recommended by Kepler. |
| 2 | SIMPLE | 1620 | 10˚ | 0.95 | 20 | Bi-convex lens |
| 3 | HUYGHENIAN | 1703 | 40˚ | 0.3 | 12 | First eyepiece designed to optical theory; 1-1 negative, intended to reduce spherical aberration of single lens O.G. |
| 4 | HERSCHEL | 1768 | 15˚ | 0 | 30 | William Herschel's glass bead magnifiers, based upon those of Leeuwenhoek. |
| 5 | DOLLOND | 1760-80 | 20˚ | 0.9 | 15 | First achromatic doublet. |
| 6 | RAMSDEN | 1783 | 35˚ | 0 | 7 | First 1-1 positive. |
| 7 | MODIFIED RAMSDEN | 1800+? | 30˚ | 0.25 | 7 | Reduced separation to give workable eye relief. |
| 8 | MITTENZUUEY | 1800? | 40˚ | 0.3 | 10 | Meniscus lensed Huyghenian having reduced spherical error. |
| 9 | WOLLASTON | 1810? | 15˚ | 0 | 30 | Spherical magnifier with central stop. |
| 10 | BREWSTER | 1825? | 12˚ | 0 | 20 | Cut down spherical magnifier. |
| 11 | CODDINGTON | 1825? | 15˚ | 0 | 20 | Cut down spherical magnifier with central groove as field stop. |
| 12 | STANHOPE | 1825+? | 15˚ | 0 | 20 | Thick lens magnifier with differing lens radii. |
| 13 | CHEVALIER | 1830 | 15˚ | 0.8 | 10 | Computed doublet developed for photogenic drawing, and later used for landscape photography. |
| 14 | AIRY | 1835? | 45˚ | 0.3 | 10 | Airy's reworking of the Huyghenian to widen field of view. |
| 15 | ACHROMATIC RAMSDEN | 1849 | 30˚ | 0.4 | 6 | Carl Kellner 's first achromatic eye-piece; 1-2 configuration having reduced lateral colour. |
| 16 | KELLNER | 1849 | 45˚ | 0.45 | 6 | Improved version with bi-convex field lens. |
| 17 | TOLLES | 1850+? | 20˚ | 0 | 8 | Robert B. Tolles' solid eyepiece designed as a microscope objective. |
| 18 | STEINHEIL | 1860 | 20˚ | 0.9 | 5 | Gauss computed doublet. |
| 19 | PLÖSSL | 1860 | 45˚ | 0.68 | 6 | 2-2 achromatic and aplanatic, asymmetric wide angle designed by Gustav Simon Plössl. |
| 20 | SYMMETRICAL | 1860 | 45˚ | 0.77 | 6 | Pair of achromats, crowns facing. |
| 21 | DIAL-SIGHT | 1860 | 45˚ | 0.8 | 6 | Pair of achromats, flints facing. |
| 22 | ZEISS | 1880 | 55˚ | 0.5 | 5 | Pair of achromats, crowns forward. |
| 23 | STEINHEIL TRIPLET | 1880 | 25˚ | 0.86 | 8 | Achromatic, flint-crown-flint Loupe. |
| 24 | SCHRÖDER TRIPLET | 1885? | 30˚ | 0.8 | 8 | Achromatic, crown-flint-crown Loupe. |
| 25 | SCHRÖDER APLANATIC | 1885? | 76˚ | 0.54 | 6 | 2-2 achromatic, aplanatic, wide field. Marketed as Browning achromatic. |

## EYEPIECE EVOLUTION - 1610 to 1990+

### eyepiece types in order of origin

| No. | NAME | DATE OF ORIGIN | APPARENT FIELD | EYE RELIEF | CRITICAL f/no | COMMENTS |
|---|---|---|---|---|---|---|
| 26 | STEINHEIL MONOCENTRIC | 1880 | 28˚ | 0.6 | 6 | Flint-crown-flint achromatic triplet with all surfaces struck from a common centre, and therefore obeying the sine condition. |
| 27 | ZEISS MONOCENTRIC | 1911 | 20˚ | 0.8 | 10 | Achromatic, flint-crown-flint Loupe. |
| 28 | HASTINGS TRIPLET | 1910+? | 30˚ | 0.8 | 6 | Achromatic, flint-crown-flint Loupe, designed by Professor Hastings. |
| 29 | LOUPE TRIPLET | 1910? | 35˚ | 0.8 | 10 | Crown-flint-crown Loupe. |
| 30 | ABBÉ ORTHOSCOPIC | 1880 | 30˚ | 0.8 | 6.5 | First true Orthoscopic designed by Ernst C. Abbé of Jena. |
| 31 | COOKE | 1900 | 50˚ | 0.45 | 6 | 1-3 modified Kellner designed by H. Dennis-Taylor for Cooke, Troughton & Simms. |
| 32 | KÖNIG | 1915 | 50˚ | 0.45 | 6 | 2-1 reversed Kellner designed by Albert König. Originally designated the Kellner II. |
| 33 | COOKE | 1918 | 65˚ | 0.69 | 5 | 1-3-2 reworked 1900 design by H. Dennis-Taylor, referred to as the Cooke-5 lens; the field lens was removable. |
| 34 | KELLNER II | 1920? | 50˚ | 0.32 | 6 | 1-1-2 redesigned Kellner, by Albert König. |
| 35 | ERFLÉ I | 1917 | 60˚ | O.3 | 5 | 1-2-2; first true wide angle design by Heinrich Erflé, intended for military target acquisition telescope. |
| 36 | ERFLÉ II | 1923? | 70˚ | 0.6 | 5 | 2-1-2 redesign with wider field and greater eye relief. |
| 37 | ERFLÉ III | 1923? | 55˚ | 0.32 | 5 | 1-2-2 redesign having a flatter field, intended for use with graticule. |
| 38 | KAPELLA | 1923? | 70˚ | 0.68 | 5 | 1-2-2 redesign of Erflé III, with wider field. |
| 39 | KASPEREIT | 1923? | 65˚ | 0.3 | 6 | 2-2-2 redesign of Erflé III with wider field and less lateral colour. |
| 40 | ACHROMATIC HUYGHENIAN | 1920? | 25˚ | 0.45 | 7 | 1-2 Huyghenian with achromatic eye lens designed by Hastings. |
| 41 | HASTINGS | 1925? | 25˚ | 0.1 | 8 | Hastings' reworked Tolles having flint negative eyecap to provide some workable eye clearance. |
| 42 | ORTHOSKOP II | 1920? | 60˚ | 0.64 | 5 | 2-2 orthoscopic modification of the Plössl designed by Albert König. |
| 43 | LEITZ ORTHOSCOPIC | 1920 | 50˚ | 0.82 | 5 | 3-1 orthoscopic with wider field. |
| 44 | GOERZ | 1924 | 60˚ | 0.59 | 5 | 1-3-1 orthoscopic by C.P. Goerz, intended for military binocular. |
| 45 | GOERZ | 1924 | 55˚ | 0.46 | 5 | 2-3-2 orthoscopic designed by C.P. Goerz intended for military binocular. |

**EYEPIECE EVOLUTION - 1610 to 1990+**

**eyepiece types in order of origin**

| No. | NAME | DATE OF ORIGIN | APPARENT FIELD | EYE RELIEF | CRITICAL f/no | COMMENTS |
|---|---|---|---|---|---|---|
| 46 | BERTELE | 1925 | 70˚ | 0.8 | 5 | 1-1-2 wide angle design by Ludwig Bertele, intended for military binocular. |
| 47 | KÖNIG | 1925? | 55˚ | 0.67 | 5 | 1-2-1 wide angle design by Albert König intended for military binocular. |
| 48 | KÖNIG II | 1925? | 55˚ | 0.92 | 5 | 2-1-1 redesign having extended eye clearance. |
| 49 | SCHULTZ | 1925? | 55˚ | 0.8 | 5 | 1-2-1 wide-angle used in Leitz binocular. |
| 50 | ZEISS ORTHOSCOPIC | 1930 | 40˚ | 0.82 | 5 | 3-1 orthoscopic to Abbé's design. |
| 51 | ZEISS | 1930? | 70˚ | 0.32 | 5 | 1-2-2 modified Zeiss symmetrical with optional field lens. |
| 52 | ZEISS ASPHERIC | 1934 | 53˚ | 0.66 | 4 | 1-3 Richter designed reversed orthoscopic having a convex parabolic third surface. |
| 53 | ZEISS | 1930+? | 60˚ | 0.72 | 5 | 2-2-2 Straubel designed wide angle intended for military binocular. |
| 54 | BARR & STROUD | 1935? | 64˚ | 0.83 | 4.5 | 3-1 aspheric orthoscopic with parabolic convex seventh surface. |
| 55 | STRAUBEL | 1935? | 70˚ | 0.56 | 5 | 2-2-1 wide angle design by Straubel for military binocular. |
| 56 | GALOC | 1935? | 75˚ | 0.8 | 4 | 3-2 orthoscopic designed by Galoc for target acquisition telescope. |
| 57 | KÖNIG WIDEFIELD | 1937 | 67˚ | 0.69 | 5 | 3-2-1 wide field designed by König intended for military binocular. |
| 58 | EURYSCOPIC III | 1940 | 50˚ | 0.46 | 4 | 1-2 modified achromatic manufactured by Ferson Optical Co., Biloxi, Mississippi. |
| 59 | KALLISCOPIC | 1941 | 43˚ | 0.83 | 4.5 | 3-1 modified Abbé orthoscopic. |
| 60 | ZEISS? (UNKNOWN) | 1942? | 63˚ | 0.7 | 5 | 2-3-1-1 wide angle, possibly designed by Richter or König. |
| 61 | BRANDON ORTHOSCOPIC | 1942 | 50˚ | 0.8 | 5 | Modified asymmetric Abbé duplet, designed by Chester Brandon, manufactured by Vernonscope. |
| 62 | ASTRO PLANOKULAR | 1955 | 55˚ | 0.8 | 4 | 2-1-2 Zeiss modified Erflé II. |
| 63 | TRIPLANE | 1960 | 40˚ | 0.3 | 6 | 1-2 Kellner type marketed by Swift. |
| 64 | R.K.E. | 1975 | 45˚ | 0.9 | 6 | 2-1 Kellner II type designed by David Rank.RKE = Reversed Kellner Eyepiece. |
| 65 | SHOEMAKER | 1975 | 43˚ | 1.0 | 10 | Computer designed flat field eyepiece. |

## EYEPIECE EVOLUTION - 1610 to 1990+

### eyepiece types in order of origin

| No. | NAME | DATE OF ORIGIN | APPARENT FIELD | EYE RELIEF | CRITICAL f/no | COMMENTS |
|---|---|---|---|---|---|---|
| 66 | FLEISCHMAN | 1977 | 50˚ | 1.13 | 4 | 1-1-2-1: First computer auto-optimisation for Zeiss. |
| 67 | MODIFIED RAMSDEN | 1980 | 60˚ | 0.1 | 5 | 1-1 fluorite lens wide angle asymmetric Ramsden, with zero rectilinear distortion, designed by Walter Kastner. |
| 68 | KALLIPLAN | 1980 | 25˚ | 0.8 | 15 | 2-2 Symmetrical achromatic, flint concaves aspherized; designed by J.D. Greenwood. |
| 69 | NAGLER I | 1980 | 82˚ | 1.2 | 4.5 | 2-1-2-2 ultra-wide angle with Smyth lens, designed by Al Nagler. |
| 70 | TUSCON ASPHERIC | 1982 | 40˚ | 1.0 | 6 | 2-2-2 compensating flat field designed by Clarke having aspheric eighth surface. |
| 71 | CLARKE | 1982 | 50˚ | 1.0 | 6 | 1-1-1 compensating flat field Huyghenian with Barlow lens. |
| 72 | NAGLER II | 1984 | 82˚ | 1.0 | 4.5 | 2-1-2-1-2 ultra-wide angle with Smyth lens, modified Nagler I to reduce spherical aberration of the exit pupil. |
| 73 | MEADE ULTRA WIDE ANGLE | 1985 | 84˚ | 1.5 | 4 | 2-1-2-1-2 ultra-wide angle with Smyth lens similar to Nagler II, marketed by Meade. |
| 74 | PRETORIA | 1985 | 50˚ | 0.7 | 4 | 2-1-2-1 coma correcting flat field eyepiece designed by Klee & McDowell. |
| 75 | PANOPTIC | 1988 | 68˚ | 0.7 | 4 | 2-1-1-2 wide-angle manufactured by Takahashi and others. |
| 76 | WIDE ORTHOSCOPIC | 1990 | 50˚ | 0.5 | 4 | 1-2-2 modified asymmetric Plössl with additional field lens; manufactured by Takahashi and others. |
| 77 | WIDE SCAN | 1990 | 65˚ | 1.2 | 5 | 2-1-2 & 2-2-1-2 redesigned astroplanokular, manufactured by Takahashi and others. |
| 78 | LE | 1990 | 52˚ | 1.2 | 5 | 2-1-2 & 2-2-1 redesigned astroplanokular, (Long eye relief) manufactured by Takahashi and others. |
| 79 | LV (Lanthanum) | 1990 | 52˚ | 20mm | 5 | 2-2-1-2 redesigned astroplanokular, using Lanthanum glass. Manufactured by Takahashi and others. |
| 80 | SW ASPHERIC | 1990 | 67˚ | 0.75 | 4 | 2-1-2-1 Takahashi super-wide angle having moulded aspheric meniscus eye lens. |
| 81 | LEITZ | 1990 | 88˚ & 90˚ | 0.7 | 3.5 | 2-1-1-3 Leitz-Wetzlar hyper-wide angle design having a moulded plastic meniscus shell bonded into the concave surface of the eye doublet. |